Parts Manual

Spray Star 1300

Truck Model 30-500-A

TeeJet Radion® 8140 1302
TeeJet® 744 1304
TeeJet Radion/DynaJet® 1306/1307/1308
TeeJet Matrix/DynaJet® 1318/1320/1324

SN: 130001

Product Support: ***Hwy 55 & Poplar Ave; Cameron WI 54822***
1-800-891-9435 productsupport@smithco.com

CONTENTS

Introduction.....1-3
Introduction.....1
General Safe Practices.....2
Specifications 3
Optional Spray Equipment.....3

Service.....4-11
Maintenance.....4-6
Wheel Creep.....6
Adjustments.....7-8
Service Chart.....9-10
Storage.....11

Diagrams 12-15
Wiring Diagram.....12-13
Hydraulic Diagram.....14-15

Parts.....16-59
Body & Frame 16-17
Steering 18-19
Control Panel.....20-21
Foot Pedal Linkage.....22-23
Front Axle 24-25
Seat Panel.....26-27
Engine hood & Roll Bar 28-29
Oil Tank.....30
Hydraulic Cooler.....31
Fuel Tank 32-33
Engine 34-35
Hydrostat & Gear Pump 36-37
Exhaust.....38-39
Rear Wheel Drive 40
Valves 41
Spray Pump.....42-43
Spray Tank.....44-45
Turbo Quad Agitator 46
15-984 Hypro® Pump 47
34-103 Orbitrol.....48-49
76-197 Eaton Gear Pump.....50
30-101 Eaton Motor.....51
30-423 Hydrostat Pump.....52-55
30-099 Auburn Power Wheel® 56-57
30-100 Disc Brake.....58-59

Spray Systems.....60-105
1302 System Plumbing 60-61
1304 System Plumbing.....62-63
1302 TeeJet® Radion Wiring 64
1304 TeeJet® 744A Wiring 66
Star Command I Plumbing 66-67
Star Command I Module Mount.....68
Star Commadn I DynaJet Wiring.....69
Star Command II Plumbing 70-71
Star Command II Module Mount.....72
Star Command II DynaJet Wiring.....73
Matrix 908 Wiring.....74
20-684 Flow Meter.....75
Control Mounts 76-77
20-817 Regulator Valve 78
20-785 Regulator Valve 79
15-743 Manifold Ball valve 80
15-737/14-628 Flanged Strainer.....81
14-801 Agitation Strainer.....82
14-607 QC Strainer 83
32-520 20' HD Boom 84-88
32-518 18' HD Boom 89-93
32-516 24' HD Boom9 94-98
Boom Lock.....99
Boom Hinge Assembly 100
Boom Cylinder Drawing.....101
Star Command I Nozzle Assembly.....102-103
Standard Nozzle Assembly.....104
20-914 Nozzle Assembly.....105

Accessories 106-127
30-501 Electric Hose Reel 106-108
30-509 Hose Reel 109
Hose Reel Installation.....110-111
30-503 Foam Marker Installation..... 112-115
14-291 Foam Marker Parts List..... 116-117
Foamer Regulator Valve..... 118
Foam Marker Wiring..... 119
30-510 Water Meter Kit 120
30-006 Fresh Water Tank - Rear Mount 121
15-835 Tank Rinsing System.....122
30-502 26GAL Rinse Tank.....123
30-515 Chemical Clean-load System.....124-125
15-620 Chemical Clean-load® Eductor.....126-127

Reference 128-130
Decal List.....128
Quick Reference Replacement Parts 130

INTRODUCTION

Thank you for purchasing a ***Smithco*** product.

Read this manual and all other manuals pertaining to the Spray Star 1300 carefully as they contain safety, operating, assembly and maintenance instructions. Failure to do so could result in personal injury or equipment damage.

Keep manuals in a safe place after operator and maintenance personnel have read them. Right and left sides are from the operator's seat, facing forward.

WARNING

Failure to follow cautious operating practices can result in serious injury to the operator or other persons. The owner must understand these instructions, and must allow only trained persons who understand these instructions to operate this vehicle.

All ***Smithco*** machines have a Serial Number and Model Number. Both numbers are needed when ordering parts. The machine serial number is located on the right hand frame rail. Refer to engine manual for placement of engine serial number.

For product and accessory information, help finding a dealer, or to register your product please contact us at **www.Smithco.com.**

Information needed when ordering replacement parts:

1. Model Number of machine
2. Serial Number of machine
3. Name and Part Number of part
4. Quantity of parts

For easy access record your Serial and Model numbers here.

Model Number: _____

Serial Number: _____

Date of Purchase: _____

SMITHCO CUSTOMER SERVICE 1-800-891-9435

SAFE PRACTICES

1. It is your responsibility to read this manual and all publications associated with this machine.
2. Never allow anyone to operate or service the machine or its optional equipment without proper training and instructions. Never allow minors to operate any equipment.
3. Learn the proper use of the machine, the location and purpose of all the controls and gages before you operate the equipment. Working with unfamiliar equipment can lead to accidents.
4. Wear all the necessary protective clothing and personal safety devises to protect your head, eyes, ears, hands and feet. Operate the machine only in daylight or in good artificial light.
5. Inspect the area where the equipment will be used. Pick up all debris you can find before operating. Beware of overhead obstructions and underground obstacles. Stay alert for hidden hazards.
6. Never operate equipment that is not in perfect working order or without decals, guards, shields, or other protective devices in place.
7. Never disconnect or bypass any switch.
8. Carbon monoxide in the exhaust fumes can be fatal when inhaled, never operate a machine without proper ventilation.
9. Fuel is highly flammable, handle with care.
10. Keep engine clean. Allow the engine to cool before storing and always remove the ignition key.
11. Disengage all drives before starting the engine.
12. Never use your hands to search for oil leaks. Hydraulic fluid under pressure can penetrate the skin and cause serious injury.
13. This machine demands your attention. To prevent loss of control or tipping of the vehicle:
    A. Use extra caution in backing up the vehicle. Ensure area is clear.
    B. Do not stop or start suddenly on any slope.
    C. Reduce speed on slopes and in sharp turns. Use caution when changing directions on slopes.
    D. Stay alert for holes in the terrain and other hidden hazards.
14. Before leaving operator's position:
    A. Disengage all drives.
    B. Shut engine off and remove the ignition key.
    C. If engine has to run to perform any maintenance keep hands, feet, clothing and all other parts of body away from moving parts.
15. Keep hands, feet and clothing away from moving parts. Wait for all movement to stop before you clean, adjust or service the machine.
16. Keep the area of operation clear of all bystanders.
17. Stop engine before making repairs/adjustments or checking/adding oil to the crankcase.
18. Use parts and materials supplied by ***Smithco*** only. Do not modify any function or part.
19. Use caution when booms are down as they extend out beyond the center line of the machine.
20. The tank is a confined space, take precaution.

These machines are intended for professional maintenance on golf courses, sports turf, and any other area maintained turf and related trails, paths and lots. No guaranty as to the suitability for any task is expressed or implied.

SPECIFICATIONS SPRAY STAR 1300

WEIGHTS AND DIMENSIONS	
Length	160" (4.1m)
Width	72" (1.8m)
Width w/ Booms Open	20' - 260" (6.6m) 18' - 240" (6.1m)
Height w/ Roll Bar	77" (2.0m)
Height w/ Booms Folded	20' - 96" (2.4m) 18' - 86"(2.2m)
Wheel Base	68" (1.4m)
Weight Empty	2700 lbs (1225 kg)
Weight Full	5100 lbs (2313 kg)
SOUND LEVEL (DBA)	
At ear level	86 dBA
At 30 ft. (9.14 m)	75 dBA
ENGINE	
Make	Kubota
Model#	WG1605
Code / Spec#	G-E3-KEA-3
Rated Horsepower	57 hp (42.5 kW) @3600RPM
Fuel (EMISSIONS)	Unleaded 87 Octane Gasoline Minimum
Cooling System	Liquid Cooled
Lubrication System	Full Pressure
Alternator	40 Amp
WHEELS & TIRE	Front: Two 22 x 11.00 x 10 Turf; 20 psi (1.4 bar)
	Rear: Two 29 x 14.00 x 15 Multi-Trac; 30 psi (2.0 bar)
SPEED	
Infinitely Variable	0-10 m.p.h. (0-18 kph)
BATTERY	Automotive type 22NF - 12 volt
BCI Group	22NF
Cold Cranking Amps	900 minimum
Ground Terminal Polarity	Negative (-)
Maximum Length	10.25" (26 cm)
Maximum Width	6.88" (17 cm)
Maximum Height	10" (25 cm)
FLUID CAPACITY	
Crankcase Oil	See Engine Manual
Fuel	17 gallon (64.4 liters)
Hydraulic Fluid	10 gallon (37.8 liters)
Grade of Hydraulic Fluid	SAE 10W-40 API Service SJ or higher Motor Oil

OPTIONAL EQUIPMENT

30-510	Water Meter Kit	30-509	Manual Hose Reel
32-518	18' HD Boom	30-501	Electric Hose Reel
32-520	20' HD Super Boom	30-502	26 Gallon Wash Tank
32-516	24' HD Super Boom	30-503	Foam Marker
30-006	Fresh Water Tank	15-835	Tank Rinse System
30-515	Chemical Cleanload Safe Fill	20-860	Sunshade Canopy

MAINTENANCE

⚠ CAUTION **Before servicing or making adjustments to machine, stop engine and remove key from ignition.**

⚠ IMPORTANT **Use all procedures and parts prescribed by the manufacturer's. Read the engine manual before operation.**

Service

LUBRICATION

Use No. 2 General purpose lithium base grease and lubricate every 100 hours. The Spray Star 1300 has 8 grease fittings.

A. One on the rod end of hydraulic cylinder.
B. One on each the right and left spindles.
C. One on each end of tie rod.
D. One on the centering arm.
E. One on each of the pedal relays.
F, One on the shift relay.

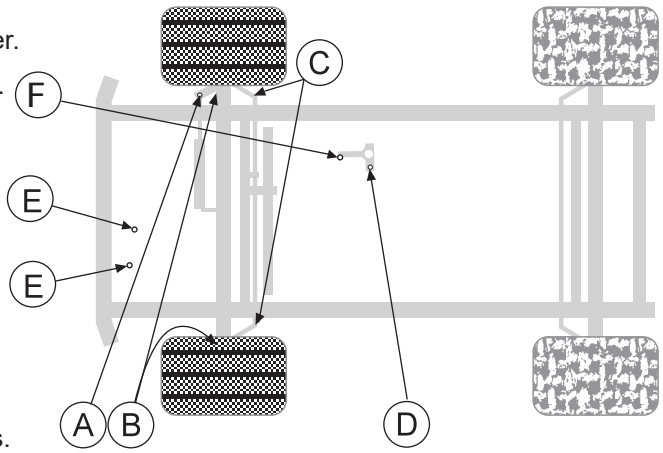

ELECTRICAL CONNECTIONS

Use dielectric grease on all electrical connections.

AIR CLEANER ON ENGINE

Since the air cleaner on this engine is a dry type, never apply oil to it.

1. Open evacuator valve (see engine manual) once a week to remove large particles of dust and dirt.
2. Wipe the inside of the air cleaner with a cloth if it gets wet or dirty.
3. Avoid touching the element except when cleaning.
4. When dust adheres to the element, gently tap element on flat surface.
5. When carbon or oil adheres to the element clean according to engine manual.
6. Replace the element every year or every 6 months.
7. IMPORTANT - Make sure wing bolt for the element is tight enough. If it is loose, dust and dirt may be sucked in, wearing down the cylinder liner and piston ring, resulting in poor power output.

⚠ IMPORTANT **Do not use petroleum solvents, e.g.., kerosene, which will cause cartridge to deteriorate. Do not use pressurized air to clean cartridge. Pressurized air can damage cartridge.**

ENGINE OIL

Change and add oil according to chart below based on air temperature at the time of operation. Do not overfill. Use a high quality detergent oil classified "For Service use API classification SJ or higher" oil. Use no special additives with recommended oils. Do not mix oil with gasoline.

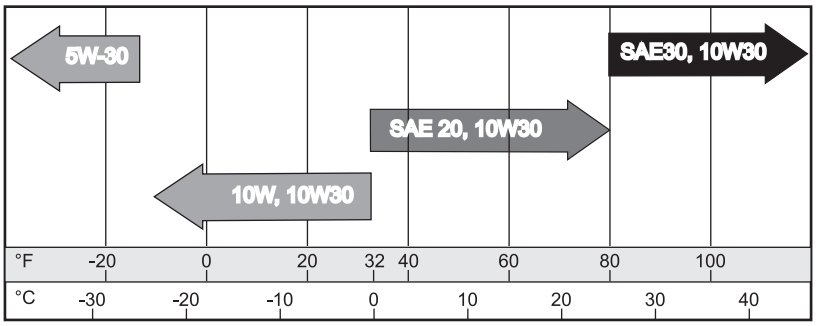

Starting Temperature Range Anticipated Before Next Oil Change

HYDRAULIC OIL

1. Use SAE 10W-40 API Service SJ or higher motor oil.
2. For proper warranty, change oil the first 50 hours and then every 200 hours or annually, which ever is first.
3. Oil level should be 2-2½" (5-6.4cm) from top of the tank when fluid is cold. Do not overfill.
4. After changing oil, run the machine for a few minutes. Check oil level and for leaks.
5. Always use extreme caution when filling hydraulic oil tank or checking level to keep system free of contaminants. Check and service more frequently when operating in extremely cold, hot or dusty conditions.
6. If the natural color of the fluid has become black or smells burnt, it is possible that an overheating problem exists.
7. If fluid becomes milky, water contamination may be a problem.
8. If either of the above conditions happen, change oil immediately after fluid is cool and find the cause. Take fluid level readings when the system is cold.
9. In extreme temperatures you can use straight weight oil. We recommend SAE 30W API Service SG when hot (above 90°F (33°C)) and SAE 10W API Service SJ or higher when cold (below 32°F (0°C) ambient temperature. Use either motor oil or hydraulic oil, but do not mix.
10. Oil being added to the system must be the same as what is already in the tank. Mark the tank fill area as to which type you put in.

TIRE PRESSURE

Caution must be used when inflating a low tire to recommended pressure. Over inflating can cause tires to explode. Front tires should be 20 psi (1.4bar) and rear tires should be 30 psi (2.0bar). Improper inflation will reduce tire life considerably.

MAINTENANCE

BATTERY

Batteries normally produce explosive gases which can cause personal injury. Do not allow flames, sparks or any ignited object to come near the battery. When charging or working near battery, always shield your eyes and always provide proper ventilation.

Battery cable should be disconnected before using “Fast Charge.”

Charge battery at 15 amps for 10 minutes or 7 amps for 30 minutes. Do not exceed the recommended charging rate. If electrolyte starts boiling over, decrease charging.

Always remove grounded (-) battery clamp first and replace it last. Avoid hazards by:

1. Filling batteries in well-ventilated areas.
2. Wear eye protection and rubber gloves.
3. Avoid breathing fumes when electrolyte is added.
4. Avoid spilling or dripping electrolyte.

⚠ WARNING

Battery Electrolyte is an acidic solution and should be handled with care. If electrolyte is splashed on any part of your body, flush all contact areas immediately with liberal amounts of water. Get medical attention immediately.

⚠ WARNING

Use of booster battery and jumper cables. Particular care should be used when connecting a booster battery. Use proper polarity in order to prevent sparks.

TO JUMP START (NEGATIVE GROUNDED BATTERY):

1. Shield eyes.
2. Connect ends of one cable to positive (+) terminals of each battery, first (A) then (B).
3. Connect one end of other cable to negative (-) terminal of "good" battery (C).
4. Connect other end of cable (D) to engine block on unit being started (NOT to negative (-) terminal of battery)

To prevent damage to other electrical components on unit being started, make certain that engine is at idle speed before disconnecting jumper cables.

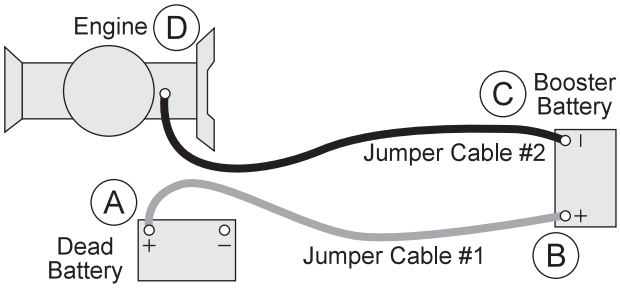

WHEEL CREEP

WHEEL CREEP

"Creep" is when the engine is running and hydrostatic transmission is in neutral, but due to inadequate alignment, wheels still move. Do the following procedure to stop this motion.

1. Lift up and support machine so rear wheels are off the ground and can turn freely.
2. In the engine compartment, the hydrostatic pump is on the right side. The shift arm (D) is on bottom of the pump The idler arm (B) has a bearing that rides in the V of the shift arm. Loosen bolt (A).
3. With engine running, move bearing (B) so it centers on the shift arm (D) and 'wheel creep' stops.
4. Tighten all fasteners and test by using foot pedal linkage to see that 'creep' is removed.
5. Turn engine off and lower machine.

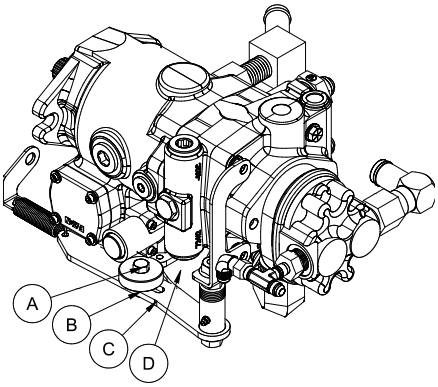

SPRAY PUMP WITH BELT

Located to the right of the engine. The belt should have approximately 1/2" (13mm) of deflection in the center of the top strand.

SAFETY INTERLOCK SWITCH

To adjust the interlock switch on the back hydrostatic pump loosen the set screw on the front half of the switch, with the ignition switch OFF. With a continuity tester connected across the switch, it should light with the shift arm centered. Move the shift arm to the right or left and the light should go off. By turning the back half of the switch clockwise it will reduce the amount of travel on the shift arm that is required for the light to remain on. The light must be on ONLY with the shift arm centered.

MASTER BOOM SWITCH (FOOT SWITCH)

The master boom switch(B) for TeeJet Radion is located on the left floorboard, is used to override the master switch (A) on the computer console of the spray systems. By pushing down on the floor master boom switch (B) it will turn on/ off the booms. *For the TeeJet System* the master switch(A) on the computer **must be on** for the master boom control switch(B) on the floor to work.

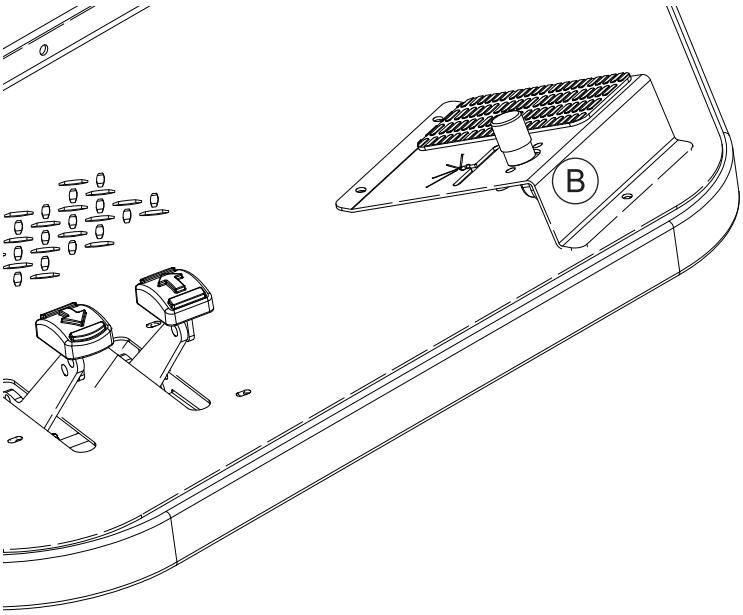

ADJUSTMENTS

SPRAY BOSS CONTROL

Engages and disengages speed boss. Forward is engage and all the way back is disengage. When the lever is engaged it sets a stop for the accelerator. The accelerator pedal must be used to maintain this speed. To adjust speed use the knob on the end of the lever, counter clockwise increases speed and clockwise decreases speed. Disengage the lever and you will have full accelerator pedal range.

TOWING

Brake must be disengaged for towing. The brake disengage cover is located at the center of the Auburn wheel drive on the rear wheels. To disengage the brake, remove the disengage cover and assemble the disengage cover with the dimple center protruding inward. This will release the brake shaft. **Road speeds must not exceed 20 MPH.** Re-assemble the disengage cover back to its original way when done towing.

⚠ WARNING **Machine is in free wheel mode when towing.**
Machine has no braking capabilities when being towed.

⚠ CAUTION **Before servicing or making adjustments to the machine, stop engine, block wheels and remove key from ignition.**

⚠ IMPORTANT **Follow all procedures and ONLY use parts prescribed by the manufacturer. Read the engine manual before maintenance.**

The suggested maintenance checklist is not offered as a replacement for the manufacturer's engine manual but as a supplement. You must adhere to the guidelines established by the manufacturer for warranty coverage. In adverse conditions such as dirt, mud or extreme temperatures, maintenance should be more frequent.

Duplicate this page for routine use

Maintenance Check Item	For the week of:						
	Mon	Tues.	Wed.	Thurs.	Fri.	Sat.	Sun.
Check the Safety Seat Switch							
Check Steering Operation							
Check the fuel level							
Check the engine oil level.							
Check the condition of the air filter							
Clean the engine cooling fins.							
Check for unusual engine noises							
Check the hydraulic oil level							
Check hydraulic hoses and fittings for damage							
Check for fluid leaks.							
Check the tire pressure (20-30 psi)							
Check the Instrumentation							
Inspect electrical system for frayed wires							
Check neutral start							
Change oil filter.							
Change oil.							
Lubricate Machine and Booms							
Ensure all warning decals are intact.							

Areas of Concern		
Inspection Performed by:		
Item	Date	Information

SERVICE CHART

Item	Maintenance Procedure
After the first 8 operating hours	Torque the wheel lug nuts. (64-74 ft/lb (87-100 Nm))
	Change the engine oil filter.
Before each use daily	Check the engine oil level.
	Clean area around muffler and controls.
	Check the hydraulic fluid level.
	Check the tire pressure.
	Check condition of hydraulic hoses and fittings.
	Check for oil or water leaks.
After the first 50 hours	Change Hydraulic Oil Filter.
	Change Engine oil and filter.
Every 100 hours	Clean or change air filter.1&2
	Clean fuel filter element. 1
	Lubricate machine.
	Check the battery fluid level and cable connections..
	Check fan belt tension and damage.
Every 200 hours	Check radiator hoses and clamp bands.
	Change engine oil.1
	Change hydraulic oil.1
	Check idle speed.
	Replace oil filter cartridge.1
	Change hydraulic oil filter.1
	Check air intake line.1
	Torque the wheel lug nuts. (64-74 ft/lb (87-100 Nm))
Every 500 hours or yearly	Clean Water Jacket and radiator interior.
Every 1000 hours	Change hydraulic oil.1
Every 2 years	Change radiator coolant (L.L.C.)
	Replace radiator hoses and clamp bands.
	Replace fuel hoses and clamps.
	Replace intake air lines.
1 In dusty conditions or when airborne debris is present, clean more often.	
2 Replace after every 6 times of cleaning	

⚠ IMPORTANT **To prevent damage from freezing, pour window washer fluid into spray systems tank and operate pump to circulate mix through gun and hose back to tank. Open boom control to circulate through rest of spray system.**

1. Clean the exterior surfaces of the engine.
2. Change the oil and filter while the engine is still warm from operation.
4. Remove battery from the engine, adjust the electrolyte level, and recharge it. Store battery in a dry dark place.
5. Store machine in a clean, dry place.

EXTENDED STORAGE

1. Check for any damaged parts or missing decals. Replace as needed.
2. Drain crankcase completely and refill with recommended engine oil or equivalent.
3. Lubricate all grease points.
4. Check coolant protection and level.
5. Clean exterior surface of engine.
6. Seal all openings in engine and accessories with non-hygroscopic material. Mask off all areas to be used for electrical contact.
7. Tape all openings and make sure all surfaces are dry. Then spray all taped openings, all engine accessories including ignition wiring, and all exterior surfaces of engine with Insulation Compound.
8. Disconnect, remove and clean battery. Check electrolyte level. Charge the battery and store in a cool dry place (NOT directly on cement).
9. Put blocks or stands under the machine to take weight off tires.

AFTER STORAGE

1. Check for any damaged parts or missing decals. Replace as needed.
2. Lubricate all grease points.
3. Clean exterior surface of engine.
4. Remove all tape and obstructions from exterior engine surfaces.
5. Charge and replace battery.
6. Check tire pressure.
7. Remove blocks or supports from under the machine.
8. Check engine oil level and coolant level and lubricate all grease points.
9. Fill fuel tank.
10. Check belt tension.
11. Run engine approximately 5 minutes before putting the engine under load.

WIRING DIAGRAM

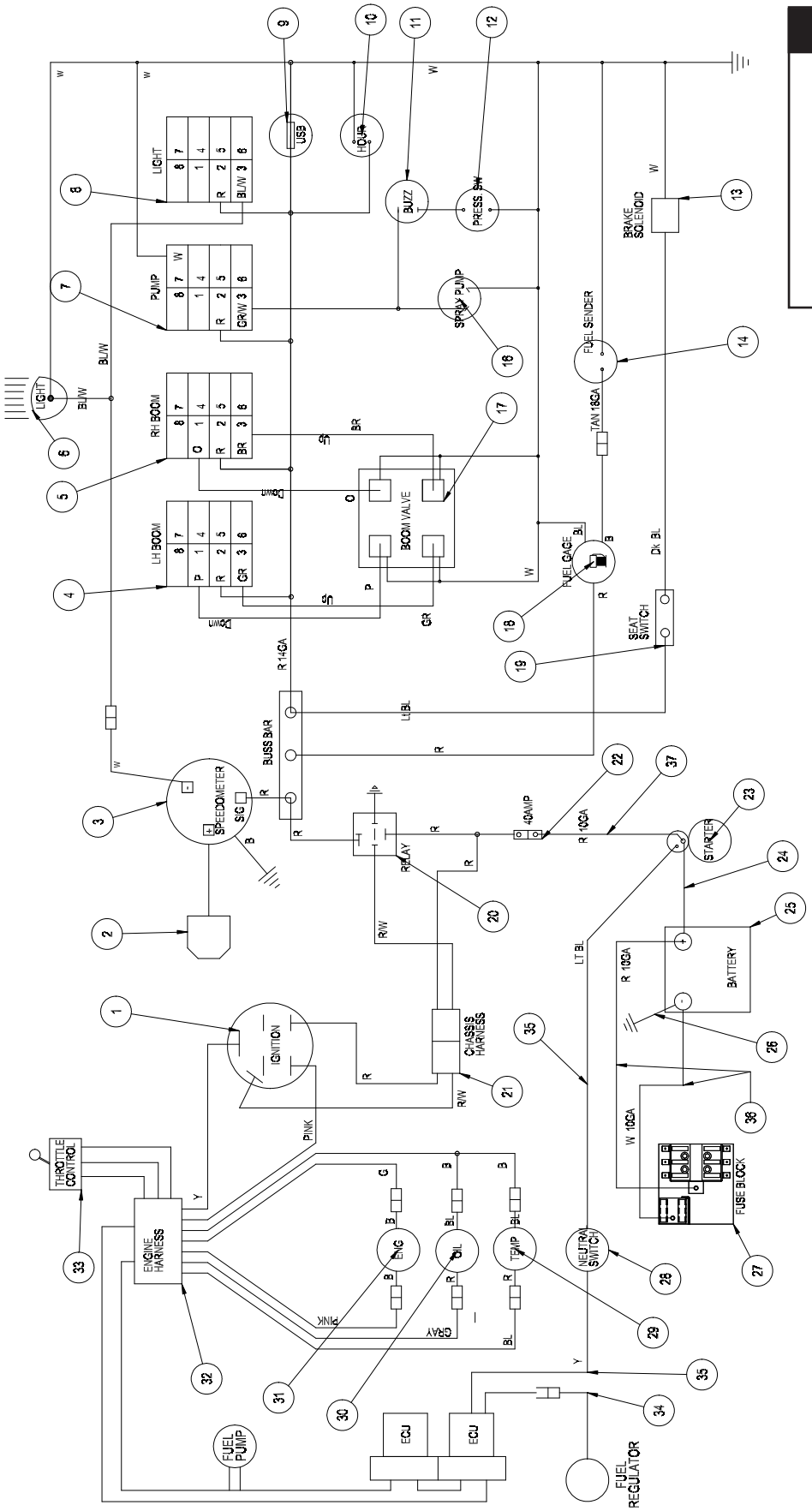

Color Code Chart	
Bl	Blue
Br	Brown
Y	Yellow
G	Green
O	Orange
R	Red
B	Black
P	Purple
W	White

Diagrams

REF#	PART#	DESCRIPTION	QUANTITY
1	13-488	Ignition Switch	1
2	20-730-01	GPS Antenna (part of speedometer)	1
3	30-356	GPS Speedometer	1
4	15-727	Rocker, No Light	1
	15-728	Centering Switch, Momentary, On-Off-On	1
5	15-727	Rocker, No Light	1
	15-728	Centering Switch, Momentary, On-Off-On	1
6	20-712	LED Light	2
7	15-726	Lighted Switch	1
	15-732	Rocker, Green	1
8	15-727	Rocker, No Light	1
	15-782	Non-Lighted Switch	1
9	32-576	USB Power Charger	1
10	12-804	Hour Meter	1
11	77-207	Buzzer	1
12	33-480	Pressure Switch	1
13	30-194	Brake Manifold with Relief Valve	1
14	30-433	Fuel Sending Unit	1
15	18-372	Manifold 3-way Ball Valve	1
16	15-984	Hypro Spray Pump	1
17	32-677	Boom Control Valve	1
18	32-649	LED Fuel Gage w/ Terminals	1
19	14-292	Seat Switch	1
20	30-042-06	Relay	1
21	30-427	Chassis Wire Harness	1
22	77-261	Circuit Breaker	1
	8977	Circuit Breaker Boot	1
23		Starter	1
24	75-518	Battery Cable	1
25	32-727	Battery, 22NF	1
26	48-147	Ground Battery Cable	1
27	33-271	Fuse Block	1
28		Neutral Switch	1
29	50-359	Red Temperature Warning Light	1
30	50-359	Red Oil Warning Light	1
31	32-521-03	Amber Engine Light	1
32	30-426	Engine Wire Harness	1
33	32-521-01	Electronic Throttle	1
34	30-345	Fuel Manifold Wire Harness	1
35	30-583	Neutral Start Wire Harness	1
36	30-584	Fuse Block Wire Harness	1
37	30-585	Circuit Breaker Wire Harness	1
	33-273	Auto Blade Fuse, 30AMP	1

HYDRAULIC DIAGRAM

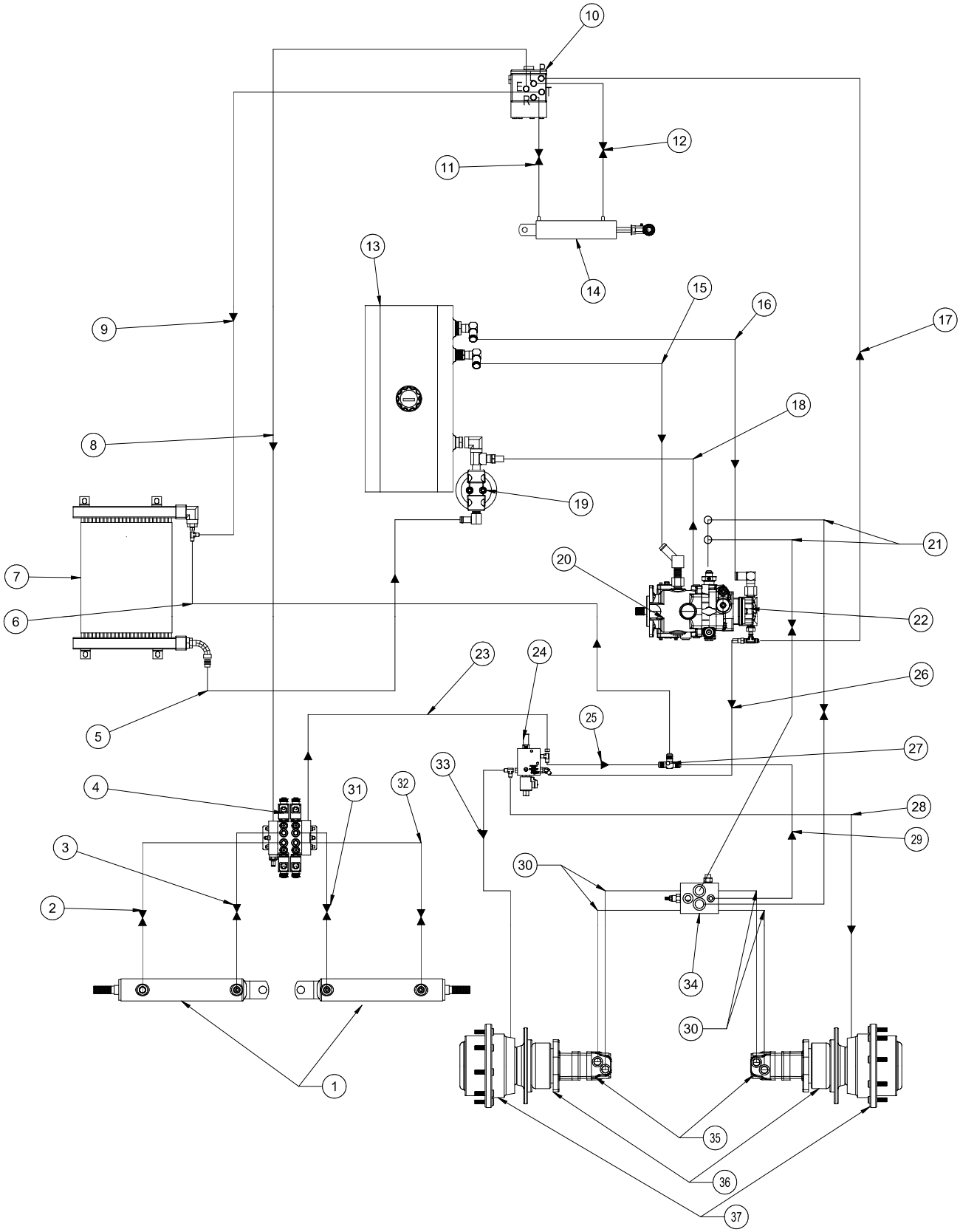

HYDRAULIC DIAGRAM PARTS LIST

REF#	PART#	DESCRIPTION	QUANTITY
1	13-406	Boom Cylinders	2
	14-267	Seal Kit	
2	30-411	Hydraulic Hose, 39"	1
3	30-410	Hydraulic Hose, 31.5"	1
4	32-677	Boom Control Valve	1
5	8832	¾" Suction Hose	31"
	18-040	Hose Clamp	2
6	30-419	Hydraulic Hose, 45.5"	1
7	30-105	Oil to Air Heat Exchanger	1
8	30-420	Hydraulic Hose, 143"	1
9	30-415	Hydraulic Hose, 110"	1
10	34-103	Orbitrol	1
	15-301-01	Seal Kit	
11	30-413	Hydraulic Hose, 62.5"	1
12	30-412	Hydraulic Hose, 70.5"	1
13	30-025	Oil Tank	1
14	15-839	Steering Cylinder	1
	15-839-01	Seal Kit	
15	8833	1" Suction Hose	36.5"
	18-222	Hose Clamp	2
16	8833	1" Suction Hose	45"
	18-222	Hose Clamp	2
17	30-414	Hydraulic Hose, 93"	1
18	8832	¾" Suction Hose	16"
	18-040	Hose Clamp	2
19	30-424	Oil Filter	1
	30-424-01	Replacement Filter Element	
20	30-423	Hydrostatic Pump	1
	33-058-01	Repair Kit	
21	30-416	Hydraulic Hose, 69.5"	2
22	76-197	Gear Pump	1
	76-197-08	Seal Kit	
23	30-421	Hydraulic Hose, 8.5"	1
24	30-194	Brake Manifold	1
25	30-418	Hydraulic Hose,17"	1
26	30-422	Hydraulic Hose, 70"	1
27	18-173	Tee	1
28	30-407	Hydraulic Hose, 34.5"	1
29	30-425	Hydraulic Hose, 17.5"	1
30	30-417	Hydraulic Hose, 12.75"	4
31	30-408	Hydraulic Hose, 36"	1
32	30-409	Hydraulic Hose, 41"	1
33	30-406	Hydraulic Hose, 19.5	1
34	30-103	Hot Oil Shuttle	1
35	30-101	Hydraulic Motor	2
36	30-100	Hydraulic Brakes	2
37	30-099	Auburn Wheel Drive	2

BODY & FRAME DRAWING

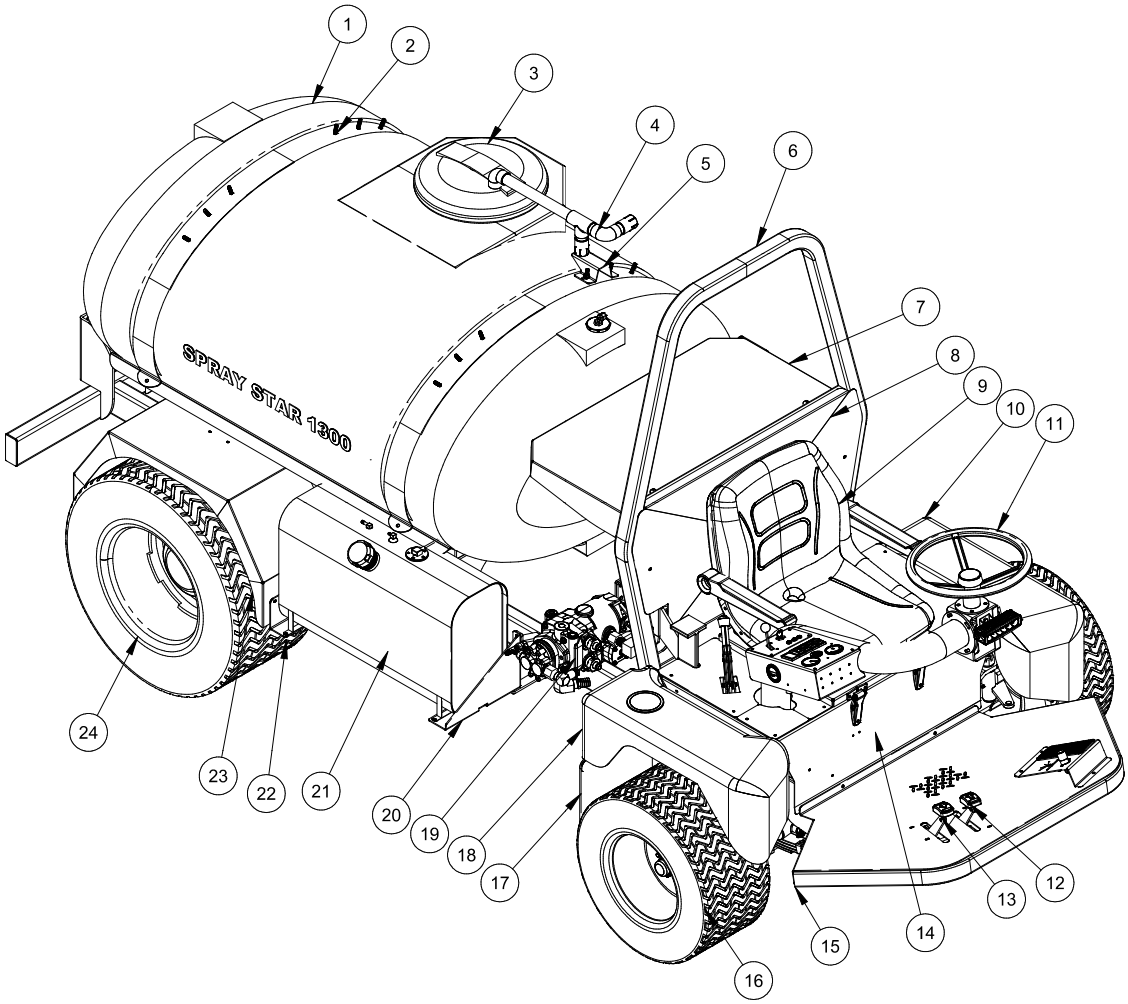

Parts

REF#	PART#	DESCRIPTION	QUANTITY
1	31-302	300 Gallon Tank	1
	30-403	Decal, Spray Star 1300	2
2	30-522	Spray Tank Strap	2
	HBCL-516-18-100	Low Shoulder Carriage Bolt, 5/16 -18 x 1	12
	9063	Vinyl Bolt Cap	12
3	16-220	Replacement Lid	1
4	30-450	Air Gap Filler	1
5	30-527	Air Gap Filler Mount	1
6	30-521	Roll Bar	1
7	30-542	Engine Hood	1
8	30-563	Seat Back Panel	1
9	14-294	Seat Kit (includes * items)	1
	*14-292	Seat Switch	1
	*14-800	Seat Rail Set	1
	*HSP-1260-340-250	Seat Spacer	4
	10-706	Arm Rest Set	1
10	30-405	LH Front Fender	1
11	20-057	15" Steering Wheel	1
	20-129	Center Cap	1
	27-077	Decal, Smithco Round	1
12	10-678	Reverse Pedal	1
	45-022	Molded Foot pedal	1
13	10-677	Forward Pedal	1
	45-022	Molded Foot pedal	1
14	30-532	Seat Frame	1
	27-055	Flush Hinge	2
	HSMFCS 10-32-050	Machine Screw, #10-32-½	12
	HNFL-10-32	Flange Whiz-loc Nut, #10 - 32	12
15	30-520	Main Frame	1
16	43-124	Turf Tread Tire and Wheel	2
	43-123-01	Tire	2
	43-058-01	Wheel	2
	HNL-12-20	Lug Nut, 1/2 - 20	14
17	20-659	Mud Flap	4
18	30-404	RH Front Fender	1
19	76-197	Gear Pump	1
20	30-535	Front Fuel Tank Mount	1
21	30-434	16 Gallon Fuel Tank	1
22	30-536	Rear Fuel Tank Mount	1
23	30-550	Rear Fender	2
24	30-048	Tire and Wheel	2
	30-048-01	Tire	2
	30-048-02	Wheel	2
	HNL-12-20	Lug Nut, 1/2 - 20	14

STEERING DRAWING

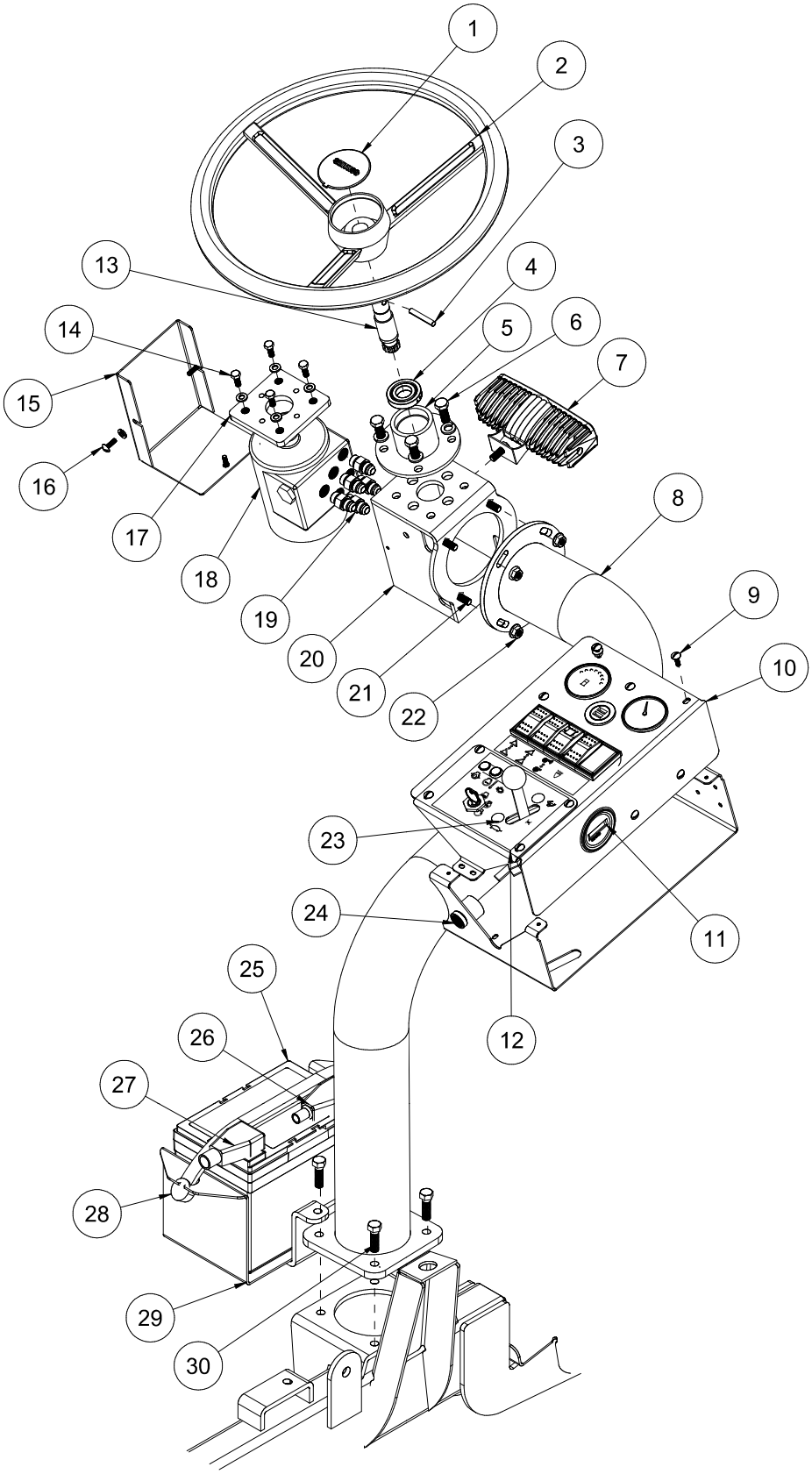

Parts

REF#	PART#	DESCRIPTION	QUANTITY
1	20-129	Steering Wheel Cap	1
	27-077	Decal, Smithco	1
2	20-057	15" Steering Wheel	1
3	HRP-14-150	Roll Pin, ¼ x 1½	1
4	10-711	Ball Bearing	1
5	10-698	Steering Column	1
6	HB-38-16-100	Hex Bolt, ⅜ - 16 x 1	4
	HWL-38	Lock Washer, ⅜	4
7	20-912	LED Head Light	1
8	30-528	Side Console Mount	1
9	HSM-10-32-100	Machine Screw, 10-32 x 1	10
	HNFL-10-32	Flange Whiz-loc Nut, 10-32	10
10	30-529	Control Panel	1
	8935	Buss Bar	1
11	12-804	Hour Meter	1
12	30-530	Engine Control Panel	1
13	10-708	Splined Steering Shaft	1
	HRR-075	Retaining Ring, ¾	1
14	HBM-6-1-16	Metric Bolt, M6x16	4
	HWLM-6	Metric Lock Washer, M6	4
15	10-704	Steering Box Cover	1
16	HSM-10-32-063	Machine Screw, 10-32 x ⅝	2
	HW-10	Lock Washer, 10	2
17	10-689	Orbital Adapter	1
18	34-103	Orbital	1
19	18-169	Adapter, ⅜ SAE	5
20	10-682	Steering Box	1
21	HBC-516-18-100	Carriage Bolt, 5⁄16 -18 x 1	4
22	HNFL-516-18	Flange Whiz-loc Nut, 5⁄16- 18	4
23	HSTP-14-20-075	Machine Screw, ¼ - 20 x ¾	2
	HNFL-14-20	Flange Whiz-loc Nut, ¼ - 20	2
24	77-207	Warning Buzzer	1
	8875	Bullet Terminal	1
	8874	Line Connector	1
25	32-727	Battery, 22NF	1
26	48-147	Black Battery Cable, Negative	1
27	75-518	Red Battery Cable, Red	1
28	8-603	Rubber Battery Strap	1
29	30-531	Battery Box	1
30	HB-38-16-125	Hex Bolt, ⅜ - 16 x 1¼	4
	HNFL-38-16	Flange Whiz-loc Nut, ⅜	4

CONTROL PANEL DRAWING

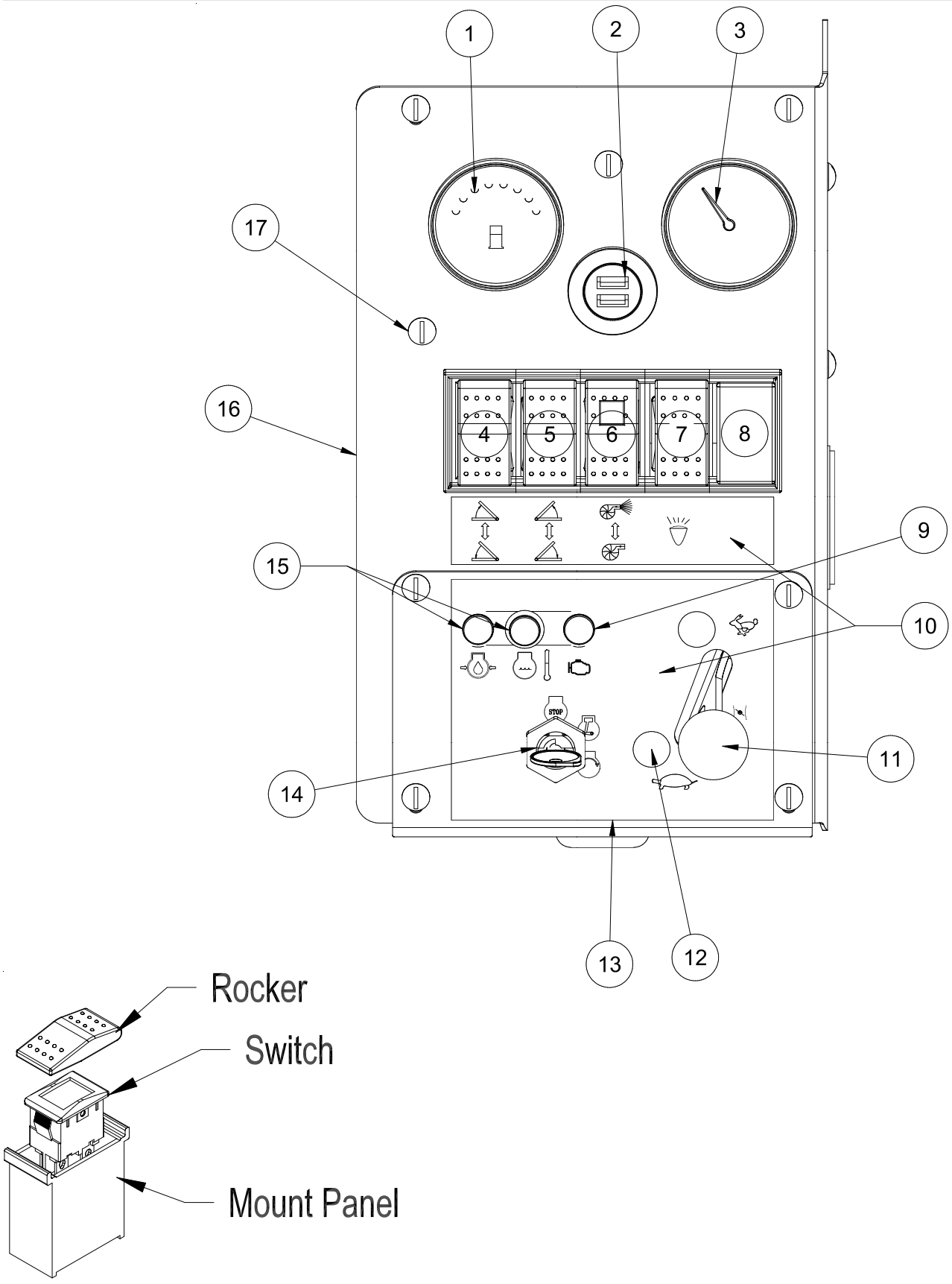

CONTROL PANEL PARTS LIST

REF#	PART#	DESCRIPTION	QUANTITY
1	32-649	LED Fuel Gauge	1
2	32-576	Dual USB Charger	1
3	30-356	GPS Speedometer	1
4	15-725	Mount Panel End	1
	15-727	Rocker, No Light	1
	15-728	Centering Switch, Momentary On-Off-On	1
5	15-727	Rocker, No Light	1
	15-729	Mount Panel Middle	1
	15-728	Centering Switch, Momentary On-Off-On	1
6	15-732	Rocker, Green	1
	15-726	Lighted Switch	1
	15-729	Mount Panel Middle	1
7	15-727	Rocker, No Light	1
	15-729	Mount Panel Middle	1
	15-782	Non-Lighted Switch, On-None-Off	1
8	15-725	Mount Panel End	1
	15-730	Panel Plug	1
9	32-521-03	Engine Indicator Light - Amber	1
10	30-402	Decal, Control Panel	1
11	32-521-01	Electronic Throttle	1
12	HSTP-14-20-075	Machine Screw, ¼ - 20 x ¾	2
	HNFL-14-20	Flange Whiz-loc Nut, ¼ - 20	2
13	30-530	Engine Control Panel	1
14	13-488	Ignition Switch	1
15	78-543	Warning Indicator Lights	2
16	30-529	Control Panel	1
17	HSM-10-32-100	Machine Screw, 10-32 x 1	10
	HNFL-10-32	Flange Whiz-loc Nut, 10-32	10

FOOT PEDAL LINKAGE DRAWING

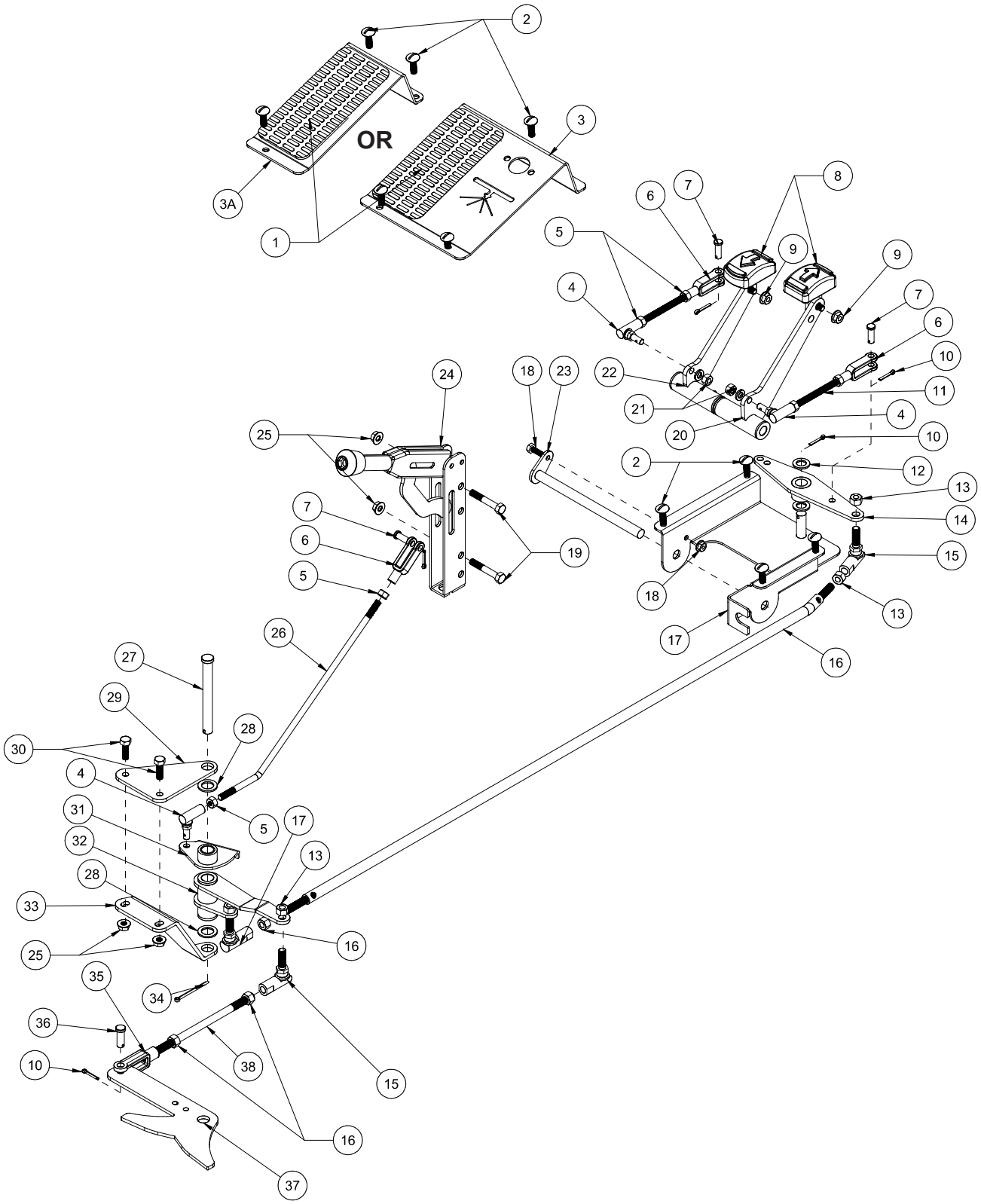

Parts

FOOT PEDAL LINKAGE PARTS LIST

REF#	PART#	DESCRIPTION	QUANTITY
1	45-132	Foot Rest Grip	1
2	HSTP-516-18-100	Truss Screw, 5/16 - 18 x 1	7
	HNTL-516-18	Lock Nut, 5/16-18	7
3	10-705	Spray Boom Foot Rest	1
3A	45-047	Foot Rest	1
4	21-462	Ball Joint, 5/16-24	3
5	HN-516-24	Hex Nut, 5/16 - 24	6
6	11-100	Linkage Yoke, 5/16 - 24	3
7	HCP-516-100	Clevis Pin, 5/16 x 1	4
8	45-022	Molded Foot Pedal	2
9	HB-516-18-075	Hex Bolt, 5/16 - 18 x 3/4	2
	HNFL-516-18	Flange Whiz-loc Nut, 5/16 - 18	2
10	HP-18-100	Cotter Pin, 1/8 x 1	4
11	10-598	Long Connector Link	2
12	HMB-12-14	Machine Bushing, 1/2 x 14GA	2
13	HN-38-24	Hex Nut, 3/8 -24	7
14	15-924	Pedal Relay	1
15	21-173	Ball Joint, 3/8 - 24	3
16	30-543	Control Link	1
17	10-674	Pedal Mount	1
18	HB-14-20-075	Hex Bolt, 1/4 - 20 x 3/4	1
	HNFL-14-20	Flange Whiz-loc Nut, 1/4- 20	1
19	HB-516-18-200	Hex Bolt, 5/16 - 18 x 2	2
20	10-677	Forward Pedal	1
	76-128	Bushing	2
	HG-14-28-180	Grease Fitting, 1/4 -28 x 180°	1
21	HWL-516	Lock Washer, 5/16	3
	HN-516-24	Hex Nut, 5/16 - 24	3
22	10-678	Reverse Pedal	1
	76-128	Bushing	2
	HG-14-28-180	Grease Fitting, 1/4 -28 x 180°	1
23	10-673	Pedal Pivot	1
24	60-106	Spray Boss Handle	1
25	HNFL-516-18	Flange Whiz-loc Nut, 5/16 -18	4
26	30-571	Spray Boss Link	1
27	HCP-58-400	Clevis Pin, 5/8 x 4	1
28	HMB-58-14	Machine Busing, 5/8 x 14GA	2
29	30-557	Top Shift Relay Plate	1
30	HB-516-18-100	Hex Bolt, 5/16-18-100	2
31	30-541	Spray Boss Limit Relay	1
	18-268	Bushing	1
32	30-540	Hydro Control Relay	1
	18-384	Flange Bushing	2
	HG-14-28-180	Grease Fitting, 1/4 -28 x 180°	1
33	30-556	Bottom Shift Relay Plate	1
34	HP-18-200	Cotter Pin, 1/8 x 2	1
35	21-351	Linkage Yoke, 3/8- 24	1
36	HCP-38-113	Clevis Pin, 3/8 x 1 1/8	1
37	30-546	Pump Shift Arm	1
38	30-570	Pump Linkage Arm	1

FRONT AXLE DRAWING

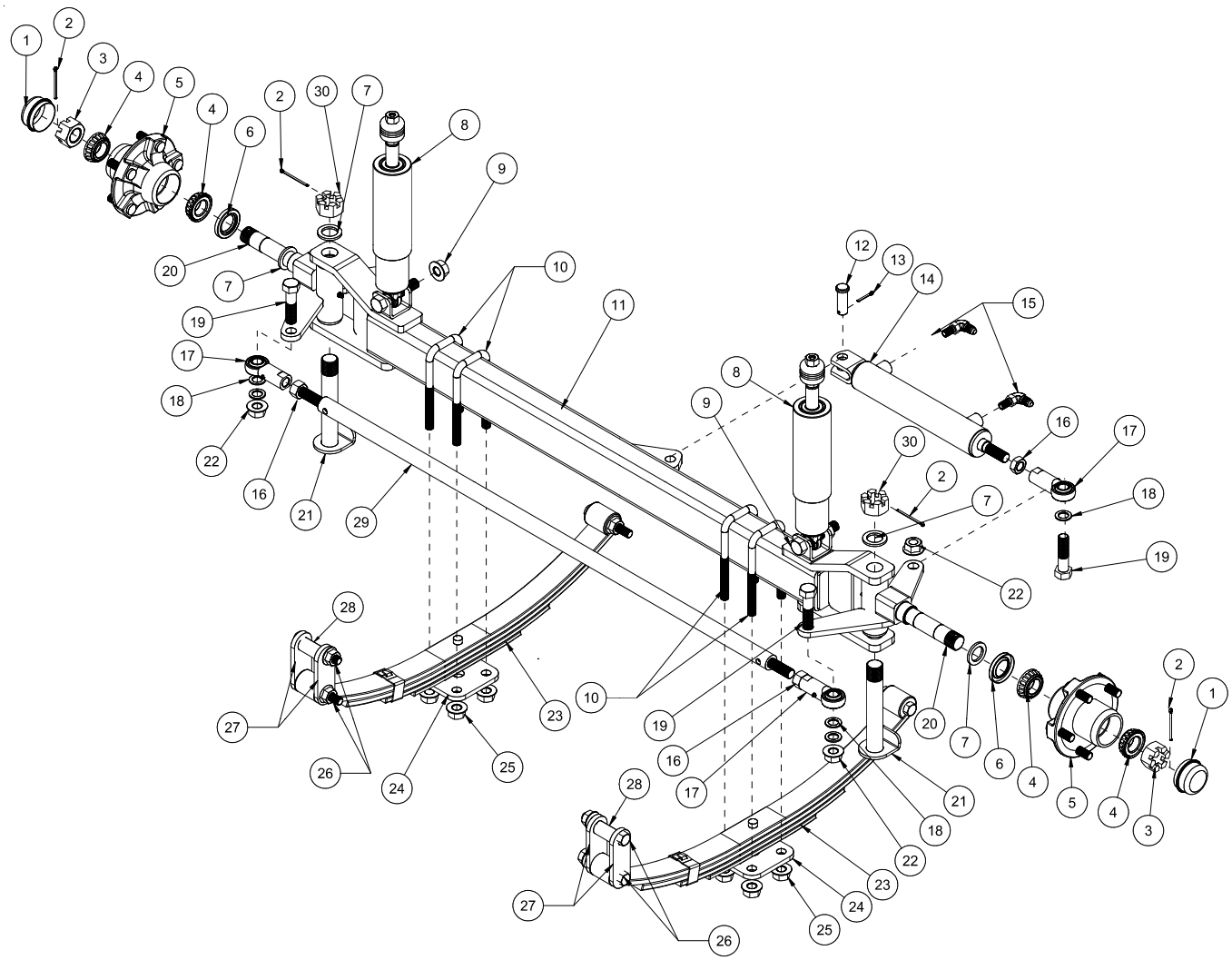

Parts

REF#	PART#	DESCRIPTION	QUANTITY
1*	33-073-02	Dust Cap	2
2	HP-18-150	Cotter Pin, $^1/_8$ - $1^1/_2$	4
3*	HNAR-100-14	Slotted Jam Nut, 1 - 14	2
4*	11-043	Bearing, Inner/Outer	2
5	30-071	Hub Assembly (includes * items)	2
6*	11-041	Seal	2
7	HMB-100-10	Machine Bushing, 1 x 10GA	4
8	20-617	Shock Absorber	2
9	HB-58-11-300	Hex Bolt, $^5/_8$ - 11 x 3	2
	HNTL-58-11	Nylon Lock Nut, $^5/_8$ -11	2
10	30-249	U-Bolt	4
11	30-533	Front Axle	1
12	HCP-58-175	Clevis Pin, $^5/_8$ x $1^3/_4$	1
13	HP-18-100	Cotter Pin, $^1/_8$ x 1	1
14	15-839	Steering Hydraulic Cylinder	1
	14-531	Seal Kit	1
15	18-168	$^3/_8$ Straight Thread Elbow	2
16	HNJ-58-18	Jam Nut, $^5/_8$ - 18	3
17	18-154	Rod End	3
	HG-14-28-90	Grease Fitting, $^1/_4$ - 28 x 90°	3
18	HMB-58-14	Machine Bushing, $^5/_8$ x 14GA	6
19	HB-58-11-250	Hex Bolt, $^5/_8$ - 11 x $2^1/_2$	3
20	30-534	Spindle	2
	33-086	Flange Bushing	2
	HG-14-28-180	Grease Fitting, $^1/_4$ -28 x 180°	1
21	16-076	King Pin	2
22	HNTL-58-11	Nylon Lock Nut, $^5/_8$ -11	3
23	20-740	Leaf Spring	2
24	20-538	Spring Mount	2
25	HNFL-12-13	Flange Whiz-loc Nut, $^1/_2$ - 13	8
26	HB-916-18-325	Hex Bolt, $^9/_{16}$ - 18 x $3^1/_4$	6
	HNTL-916-18	Nylon Lock Nut, $^9/_{16}$ -18	6
27	15-930	Spring Shackle	4
28	30-251	Bushing (pressed in main frame)	2
29	30-539	Tie Rod	1
30	HNAR-100-14	Slotted Jam Nut, 1 - 14	2

SEAT PANEL DRAWING

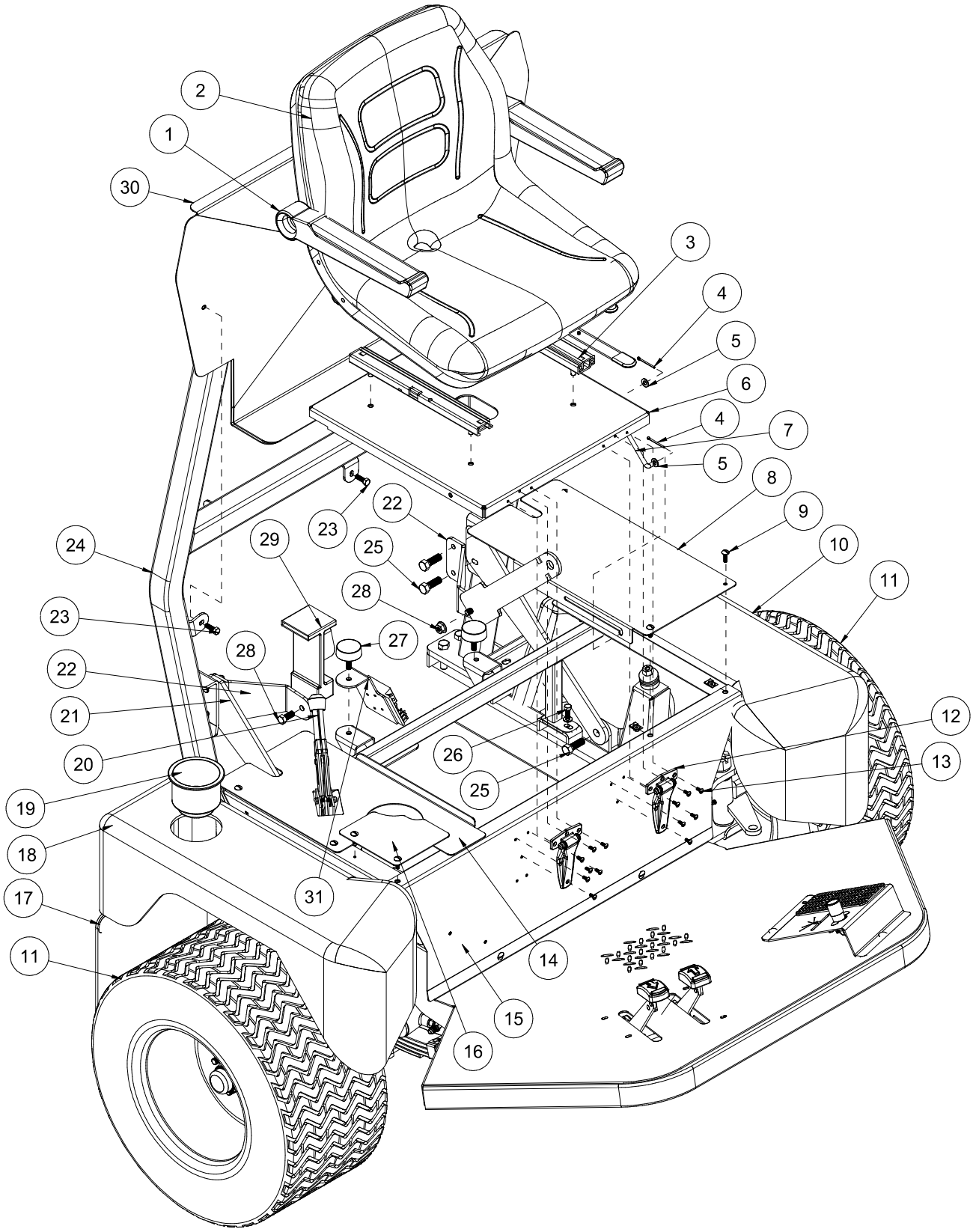

Parts

REF#	PART#	DESCRIPTION	QUANTITY
1	10-706	Arm Rest Kit	1
2	14-294	Seat Kit	1
	14-292	Seat Switch	1
3	14-800	Seat Rail	1
	HB-516-18-125	Hex Bolt, 5/16 - 18 x 1 1/4	4
	HW-516	Flat Washer, 5/16	4
	HWL-516	Lock Washer, 5/16	4
	HN-516-18	Hex Nut, 5/16 - 18	4
4	HP-18-075	Cotter Pin, 1/8 x 3/4	2
5	HW-38	Flat Washer, 3/8	2
6	10-714	Seat Panel	1
7	10-697	Seat Prop Rod	1
8	30-558	LH Side Panel	1
9	HSDPS-14-100	Pan Head Drill Screw, 1/4 x 1	8
	HNFL-14-20	Flange Whiz-loc Nut, 1/4- 20	4
10	30-405	LH Front Fender	1
	HSTP-516-18-075	Truss Head Screw, 5/16 -18 x 3/4	4
	HNFL-516-18	Flange Whiz-Loc Nut, 5/16 - 18	4
11	43-124	Turf Tread Tire and Wheel	2
	43-123-01	Turf Tread Tire	2
	43-058-02	Wheel	2
12	27-055	Hinge	2
13	HSMFCS-10-32-050	Machine Screw, #10-32 x 1/2	12
	HNFL-10-32	Flange Whiz-Loc Nut, #10-32	12
14	30-559	RH Side Panel	1
15	30-532	Seat Frame	1
16	10-694	RH Panel Cover	1
17	20-659	Mud Flap	2
18	30-404	RH Front Fender	1
	HSTP-516-18-075	Truss Head Screw, 5/16 -18 x 3/4	4
	HNFL-516-18	Flange Whiz-Loc Nut, 5/16 - 18	4
19	15-781	Drink Cup Holder	1
20	60-106	Park Brake Handle	1
21	30-555	Roll Bar Brace	2
22	15-935	Seat Belt Bracket	2
23	HSTP-516-18-075	Truss Head Screw, 5/16 -18 x 3/4	3
	HNFL-516-18	Flange-Loc Nut, 5/16 - 18	3
24	30-521	Roll Bar	1
	HB-12-13-175	Hex Bolt, 1/2 - 13 x 1 3/4	8
	HW-12	Flat Washer, 1/2	8
	HNTL-12-13	Lock Nut, 1/2 - 13	4
25	HB-12-13-150	Hex Bolt, ½ - 13 x 1½	6
	HNFL-12-13	Flange Whiz-loc Nut, ½ - 13	6
26	HB-38-16-100	Hex Bolt, ⅜ - 16 x 1	2
	HW-38	Flat Washer, ⅜	2
	HNFL-38-16	Flange Whiz-loc Nut, ⅜-16	2
27	50-081	Rubber Bumper	2
	HNTL-38-16	Lock Nut, 3/8 - 16	2
28	HB-716-14-100	Hex Bolt, 7/16 - 14 x 1	2
	HNTL-716-14	Lock Nut, 7/16 - 14	2
29	76-198-03	Seat Belt	1
30	30-563	Back Seat Panel	1
31	30-582	Fuse Mount	1
	33-271	Fuse Block	1

HOOD & ROLL BAR DRAWING

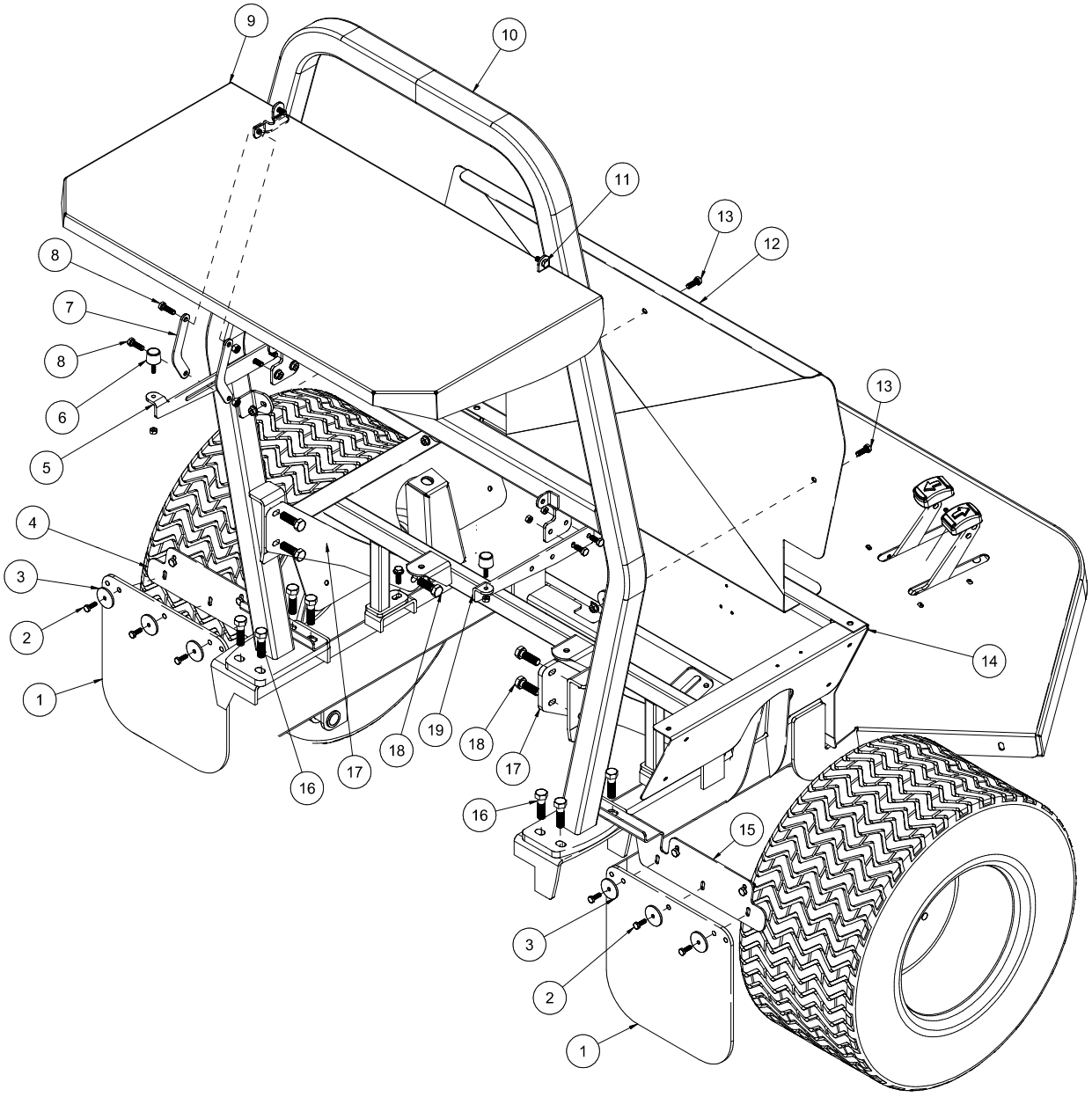

Parts

ENGINE HOOD & ROLL BAR PARTS LIST

REF#	PART#	DESCRIPTION	QUANTITY
1	20-659	Mud Flap	2
2	HB-14-20-075	Hex Bolt, ¼ -20 x ¾	6
	HNFL-14-20	Flange Whiz-loc Nut, ¼ -20	6
3	HWF-14-150	Fender Washer, ¼ x 1½	6
4	30-565	LH Front Fender Mount	1
5	30-567	LH Hood Support	1
6	15-013	Rubber Bumper	2
	HNFL-14-20	Flange Whiz-loc Nut, ¼-20	2
7	30-568	Hood Prop Link	2
8	HB-516-18-075	Hex Bolt, 5/16-18	2
	HNTL-516-18	Lock Nut 5/16-18	2
9	30-542	Engine Hood	1
10	30-521	Roll Bar	1
11	HB-516-18-075	Hex Bolt, 5/16-18	2
	HNFL-516-18	Flange Whiz-loc Nut, 5/16-18	2
12	30-563	Back Seat Panel	1
13	HSTP-516-18-075	Truss Head Screw, 5/16 -18 x 3/4	3
	HNFL-516-18	Flange-Loc Nut, 5/16 - 18	3
14	30-532	Seat Frame	1
15	30-564	RH Front Fender Mount	1
16	HB-12-13-175	Hex Bolt, ½ - 13 x 1¾	8
	HNFL-12-13	Flange Whiz-loc Nut, ½ - 13	8
17	30-555	Roll Bar Brace	2
18	HB-12-13-150	Hex Bolt, ½ - 13 x 1½	6
	HNFL-12-13	Flange Whiz-loc Nut, ½ - 13	6
19	30-566	RH Hood Support	1

OIL TANK DRAWING

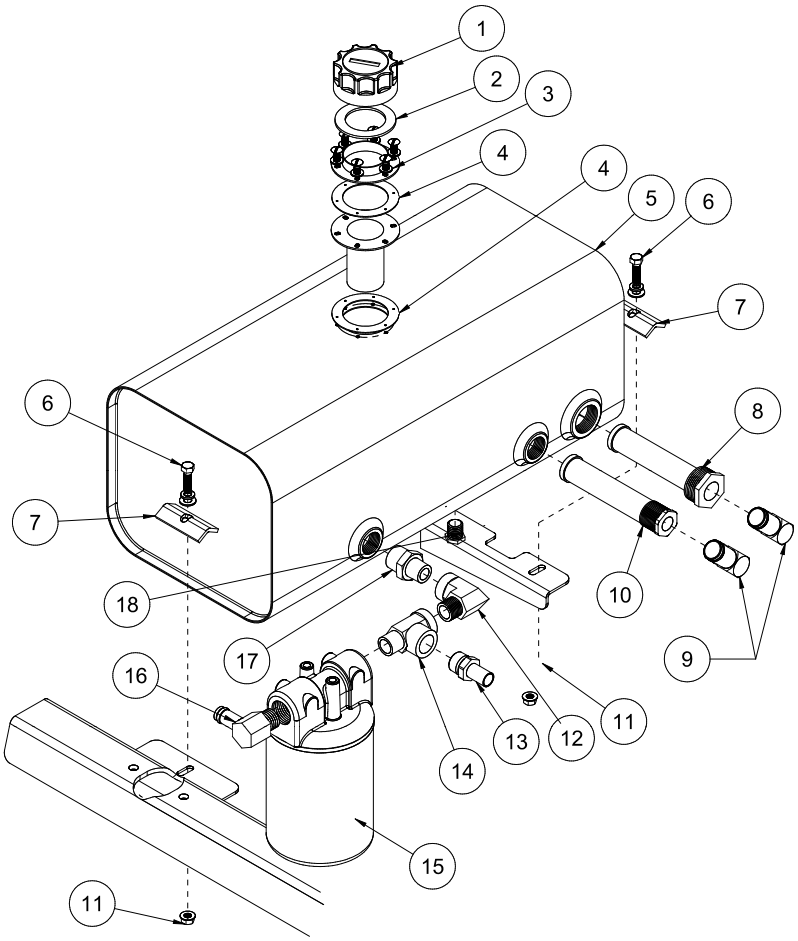

REF#	PART#	DESCRIPTION	QUANTITY
1	13-768	Filler Breather (includes * items)	1
2*	13-586-01	Cap Gasket	1
3*		Fuel Tank Neck -short	1
	HSM-10-32-063	Machine Screw, #10-32 x 5/8	6
	HWL-10	Lock Washer, #10	6
4*	13-586-02	Bottom Gasket	2
5	30-025	Oil Tank	1
6	HB-516-18-150	Hex Bolt, 5/16 - 18 x 1½	2
	HW-516	Flat Washer. 5/16	2
7	30-549	Tank Hold Down	2
8	60-213	Strainer	1
9	18-398	90° Barb Fitting	2
10	18-433	Strainer	1
11	HNFL-516-18	Flange Whiz-loc Nut, 5/16 - 18	2
12	18-140	Street Elbow, ¾ NPT	1
13	18-476	Hose Barb	1
14	18-093	Straight Tee, ¾	1
15	30-424	Oil Filter	1
	30-424-01	Replacement Filter Element	1
16	18-460	90° Hose Barb	1
17	18-400	Pip Nipple	1
18	18-069	Pipe Plug, ½	1

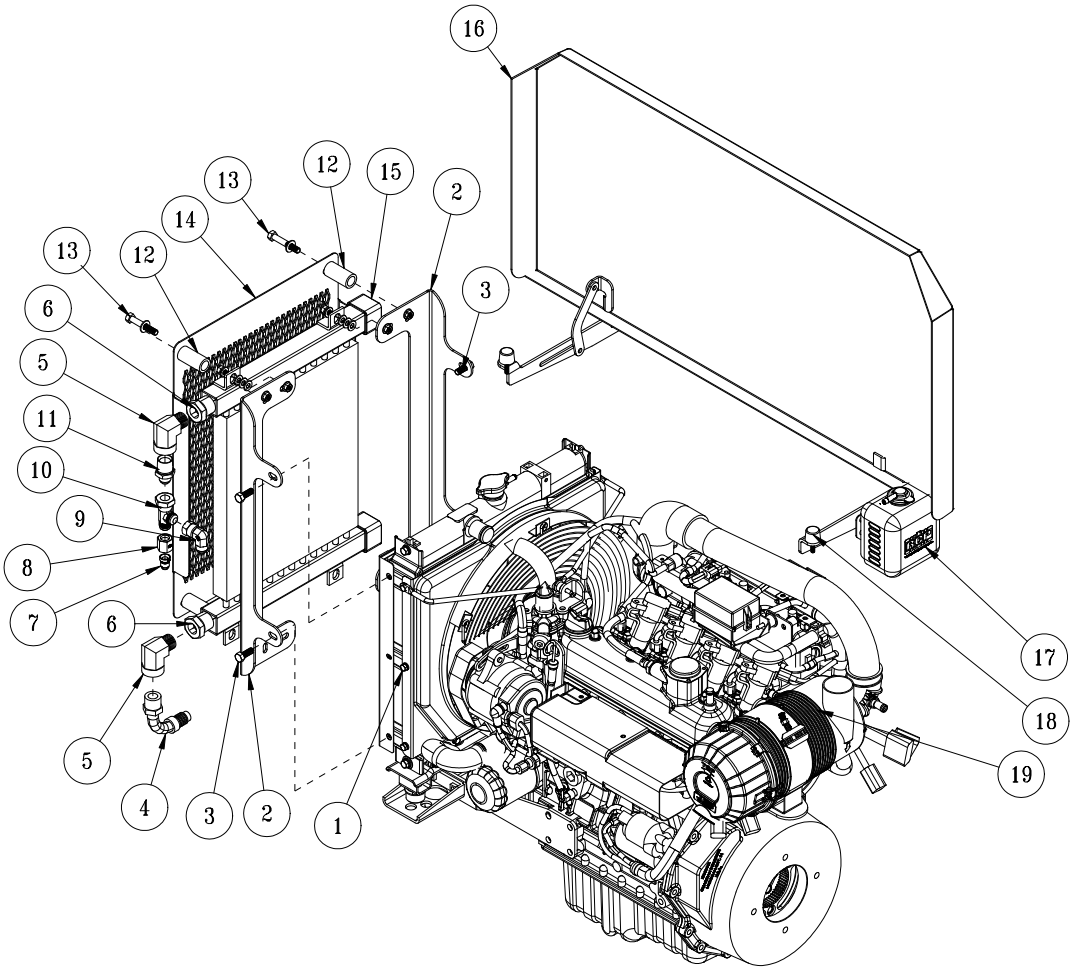

REF#	PART#	DESCRIPTION	QUANTITY
**1		Radiator Kit	1
	30-042-10	Radiator Isolator	1
2	30-028	Cooler Mount	2
3	HBM-6-1-16	Metric Hex Bolt, M6 - 1 - 16	4
	HWLM-6	Metric Washer, M6	4
	HW-14	Flat Washer, 1/4	4
4	34-123	90° Elbow	1
5	18-140	Street Elbow, 3/4 x 90°	2
6	18-107	Pipe Thread Reducer	2
7	34-128	Reducer	1
8	23-120	Nut	1
9	18-229	Elbow	1
10	18-337	Tee	1
11	18-243	Adapter	1
12	60-406	Spacer	4
13	HB-38-16-275	Hex Bolt, 3/8 - 16 x 2 3/4	4
	HW-38	Flat Washer, 3/8	4
	HNFL-38-16	Flange Whiz-loc Nut, 3/8 - 16	4
14	30-043	Oil Cooler Cover	1
15	30-105	Thermal Transfer Heat Exchanger	1
16	30-542	Engine Hood	1
**17		Coolant Overflow Tank	1
	8940	5/16 Hose	44"
	18-186	Hose Clamp	2
18	30-566	RH Hood Support	1
19	32-724	Kubota 57 HP Gas Engine (includes ** items)	1

FUEL TANK DRAWING

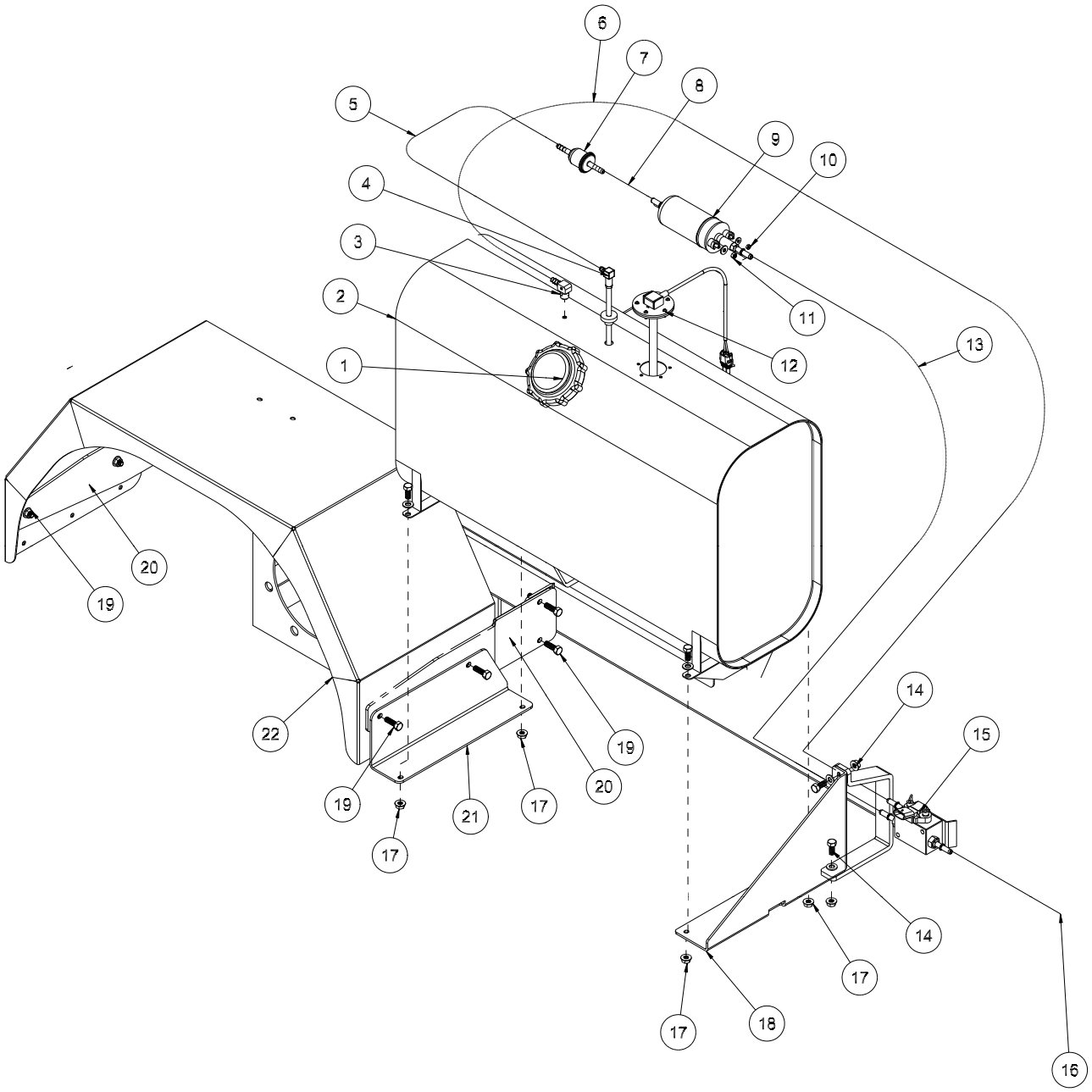

Parts

FUEL TANK DRAWING

REF#	PART#	DESCRIPTION	QUANTITY
1	30-351	Fuel Cap	1
2	30-434	16Gal. Fuel Tank	1
3	18-498	90° Bar Fitting	1
4	31-081	Top Draw	1
	42-814-07	Top Draw Grommet	1
5	8940	5/16" Fuel Hose	32"
6	8940	5/16" Fuel Hose	35"
7	32-521-04	In-line Fuel Filter	1
8	8940	5/16" Fuel Hose	3.5"
9		Fuel Pump	1
	HLC-A-200	2" Loom Clamp	1
	HB-14-20-075	Hex Bolt, 1/4-20 x 3/4	2
	HFW-14	Fender Washer, 1/4	2
	HNFL-14-20	Flange Lock Nut, 1/4-20	2
10	HWLM-4	Metric Lock Washer, M4	1
	HNM-4-0.7	Metric Nut, M4-0.7	1
11	HWLM-5	Metric Lock Washer, M5	1
	HNM-5-0.8	Metric Nut, M5-0.8	1
12	30-433	Fuel Level Sensor	1
13	8940	5/16" Fuel Hose	11.5"
14	HB-516-18-100	Hex Bolt, 5/16 - 18 x 1	2
	HW-516	Flat Washer, 5/16	2
	HNFL-516-18	Flange Whiz-loc Nut, 5/16-18	2
15		Fuel Regulator	1
	30-345	Fuel Regulator Wire Harness	1
	HB-14-20-200	Hex Bolt, 1/4 - 20 x 2	2
	HNFL-14-20	Flange lock Nut, 1/4-20	2
16	8940	5/16" Fuel Line (goes to engine)	31"
17	HB-14-20-075	Hex Bolt, 1/4 - 20 x 3/4	4
	HW-14	Flat Washer, 1/4	4
	HNFL-14-20	Flange Whiz-loc Nut, 1/4-20	4
18	30-535	Front Fuel Tank Mount	1
19	HB-516-18-125	Hex Bolt, 5/16- 18 x 1 1/4	8
	HNFL-516-18	Flange Whiz-loc Nut, 5/16-18	8
20	30-561	Rear Fender Mount	4
21	30-536	Rear Fuel Tank Mount	1
22	30-550	Rear Fender	2
NS	18-186	Fuel Line Hose Clamp	10

ENGINE DRAWING

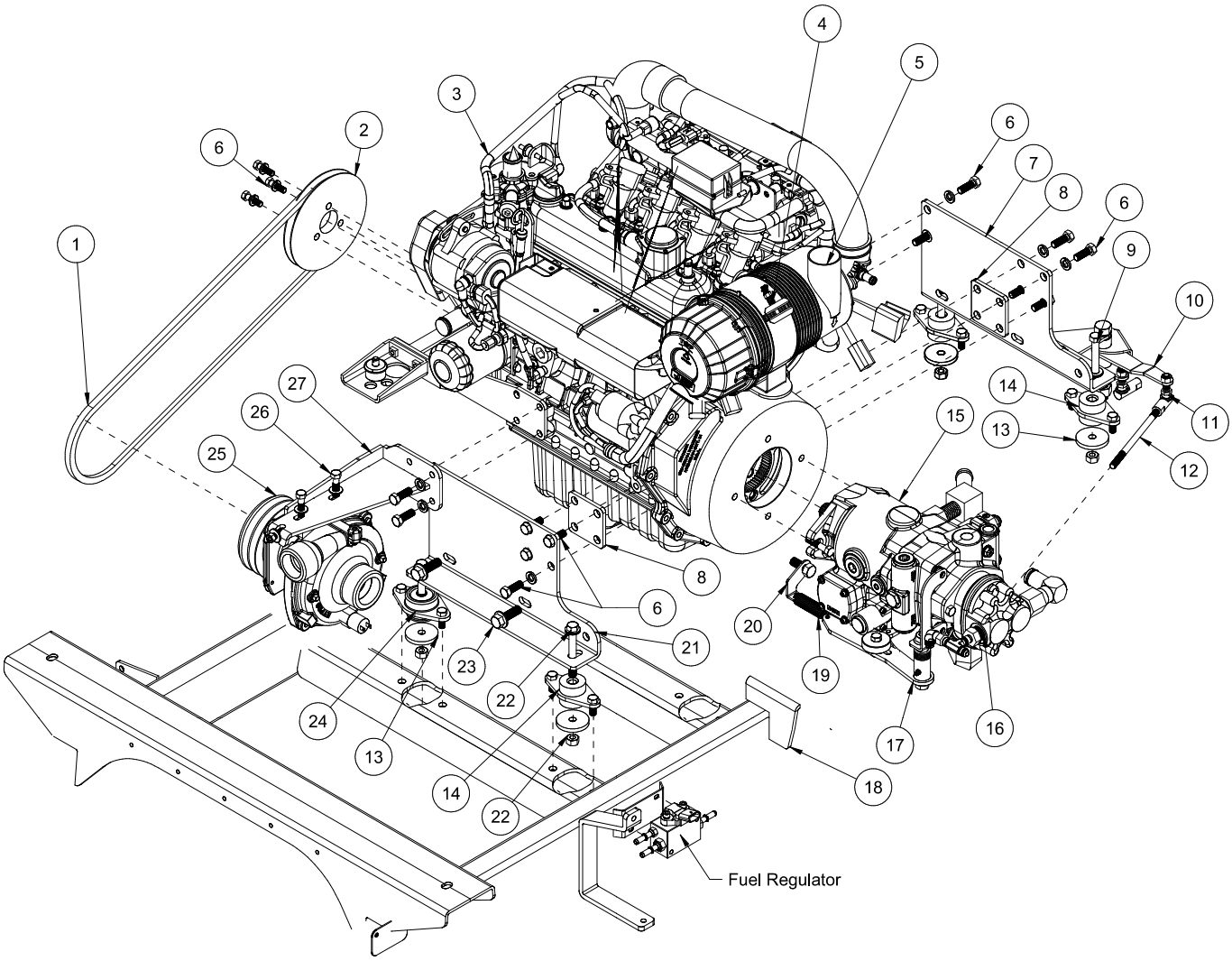

Parts

REF#	PART#	DESCRIPTION	QUANTITY
1	30-432	V-Belt, A40	1
2	30-206	Pulley	1
3	32-724	57HP Kubota Gas Engine	1
4	32-521-06	Air Cleaner Bracket (comes with Air Cleaner)	1
5	32-521-06	Air Cleaner	1
	32-521-07	Primary Filter	1
	32-521-08	Secondary (inner)Filter	1
6	HBM-10-1.25-30	Hex Bolt, #10 - 1.25 x 30	15
	HWLM-10	Lock Washer, #10	15
7	30-547	Front Engine Mount	1
8	30-038	Kubota Spacer	2
9	HB-716-14-300	Hex Bolt, $^{7}/_{16}$ - 14 x 3	2
	HW-716	Flat Washer, $^{7}/_{16}$	2
	HNTL-716-14	Nylon Lock Nut, $^{7}/_{16}$	2
10	30-540	Hydro Control Relay	1
11	21-173	Ball Joint, ⅜ - 24	2
	HN-38-24	Hex Nut, ⅜ - 24	4
12	30-570	Pump Linkage Rod	1
13	30-064	Motor Washer	4
14	30-042-01	Engine Isolator	3
	HB-38-16-125	Hex Bolt, $^{3}/_{8}$ - 16 x 1¼	3
	HNFL-38-16	Flange Whiz-loc Nut, $^{3}/_{8}$ - 16	3
15	30-423	Eaton Closed Loop Pump	1
16	76-197	Gear Pump	1
17	30-544	Centering Arm	1
18	30-520	Main Frame	1
19	48-109	Spring	1
20	30-548	Spring Mount	1
21	30-581	Rear Engine Mount	1
22	HB-716-14-300	Hex Bolt, $^{7}/_{16}$ - 14 x 3	2
	HW-716	Flat Washer, $^{7}/_{16}$	2
	HNTL-716-14	Nylon Lock Nut, $^{7}/_{16}$	2
23	HB-516-18-075	Hex Bolt, $^{5}/_{16}$ - 18 x $^{3}/_{4}$	1
	HW-516	Flat Washer, $^{5}/_{16}$	1
	HNFL-516-18	Flange Whiz-loc Nut, $^{5}/_{16}$ - 18	1
24	30-042-14	515 Vibration Mount	1
	HB-38-16-125	Hex Bolt, $^{3}/_{8}$ - 16 x $1^{1}/_{4}$	1
	HNFL-38-16	Flange Whiz-loc Nut, $^{3}/_{8}$ - 16	1
25	15-984	Hypro Spray Pump	1
26	HBM-10-1.5-50	Metric Bolt, M10-1.5 x 50	2
	HNM-10-1.5	Metric Nut, M10	2
27	30-537	Pump Mount	1

HYDROSTAT AND GEAR PUMP DRAWING

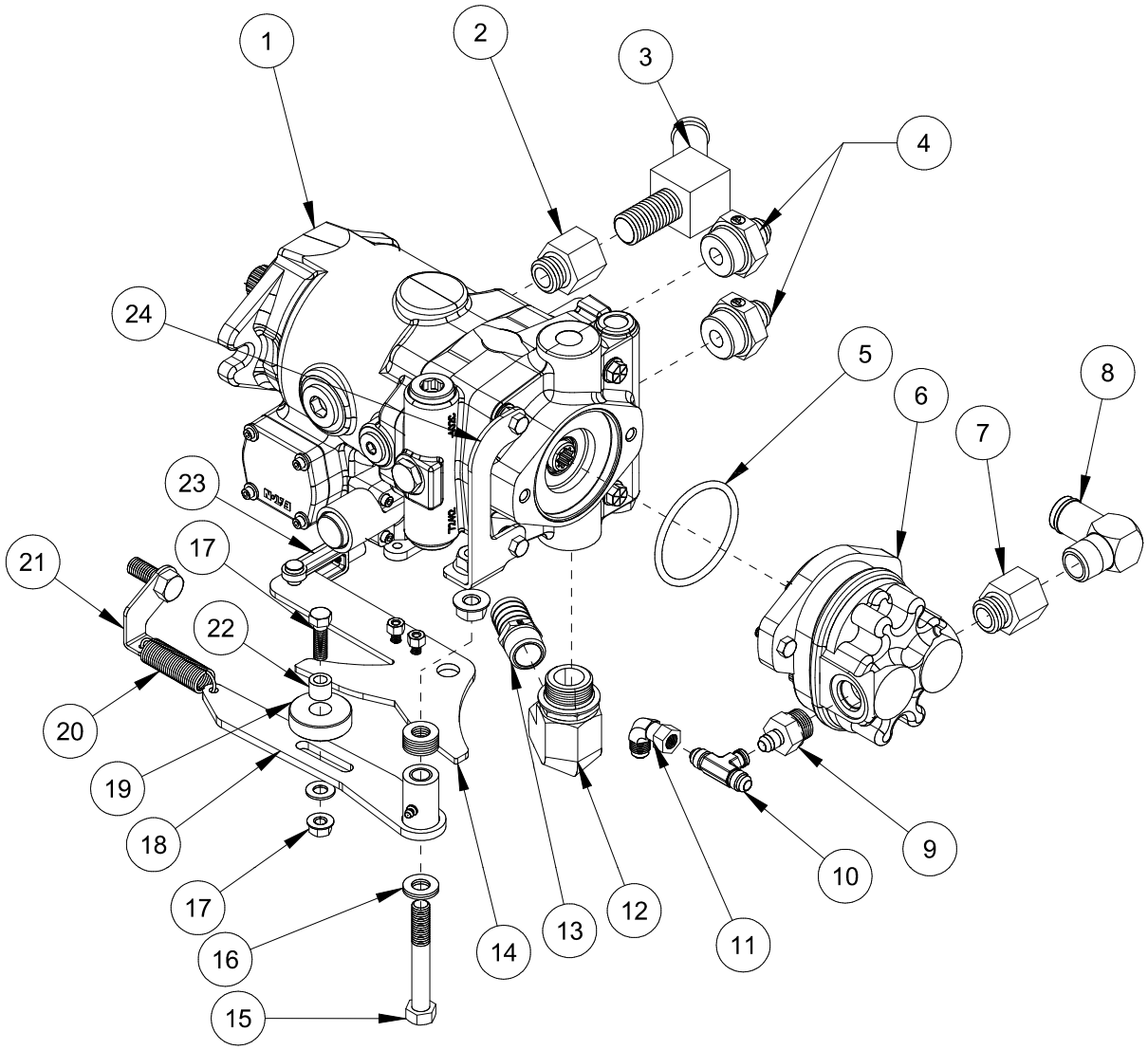

Parts

HYDROSTAT AND GEAR PUMP PARTS LIST

REF#	PART#	DESCRIPTION	QUANTITY
1	30-423	Hydrostat Pump	1
2	23-136	Adapter	1
3	18-508	45° Barb Elbow	1
4	18-513	Reducer Bushing	2
5	23-145	O-ring	1
6	76-197	Gear Pump	1
	HB-38-16-125	Hex Bolt, ⅜ - 16 x 1¼	2
	HWL-38	Lock Washer, ⅜	2
	76-197-08	Seal Kit	1
7	23-136	Straight Thread Reducer	1
8	18-398	90° Barb Fitting	1
9	18-331	Adapter	1
10	32-020	⅜ Branch Tee	1
11	18-202	Elbow	1
12	23-191	Elbow	1
13	18-250	Barb Fitting	1
14	30-546	Shift Arm	1
	HB-14-20-075	Hex Bolt, 1/4 - 20 x 3/4	2
	HNCL-14-20	Center Nylon Lock Nut, 1/4 - 20	2
15	HB-12-13-350	Hex Bolt, ½ - 13 x 3½	1
	HNFL-12-13	Flange Whiz-loc Nut, ½ - 13	2
16	HMB-12-14	Machine Bushing, 1/2 x 14GA	3
17	HBCL-38-16-100	Center Lock Bolt, 3/8 -16 x 1	1
	HNFL-38-16	Flange Whiz-loc Nut, 3/8 - 16	1
18	30-544	Centering Arm	1
	HG-14-28-180	Grease Fitting, 1/4 - 28 x 180°	1
19	14-266	Ball Bearing	1
20	48-109	Spring	1
21	30-548	Spring Mount	1
	HB-38-16-125	Hex Bolt, 3/8 - 16 x 1 1/4	1
	HW-38	Flat Washer, 3/8	1
22	18-270	Oilite Bushing	1
23	21-351	Linkage Yoke	1
	HCP-38-113	Clevis Pin, ⅜ x 1⅛	1
24	30-554	Tensioner Pivot Mount	1

EXHAUST DRAWING

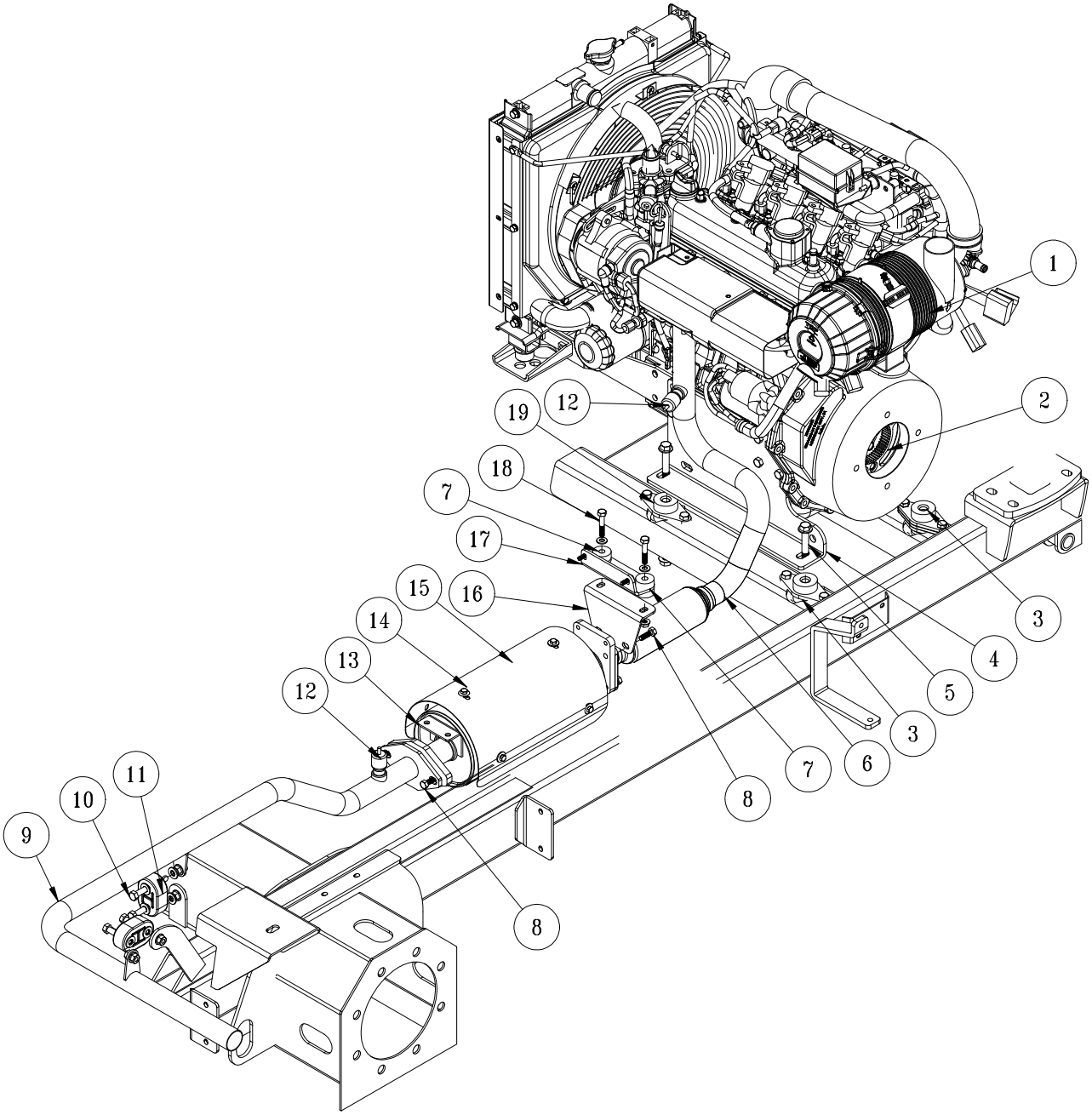

Parts

REF#	PART#	DESCRIPTION	QUANTITY
**1	32-521-06	Air Cleaner	1
	32-521-07	Primary Filter	1
	32-521-08	Secondary (inner)Filter	1
2	32-724	Kubota 57 HP Gas Engine (includes ** items)	1
3	30-042-01	Engine Isolator	2
4	30-581	Rear Engine Mount	1
5	HB-716-14-350	Hex Bolt, 7/16 - 14 x 3 1/2	2
	HW-716	Flat Washer, 7/16	2
	HNTL-716-14	Nylon Lock Nut, 7/16	2
6	30-428	Exhaust Pipe	1
**	32-521-09	Exhaust Pipe Gasket	2
7	52-124	Rubber Insulator	2
8	HBM-6-1-40	Metric Hex Bolt, M6	2
	HWLM-6	Metric Lock Washer, M6	2
	HW-14	Flat Washer, 1/4	2
9	30-429	Tailpipe	1
**	32-521-10	Tailpipe Gasket	1
10	HB-38-16-225	Hex Bolt, 3/8 - 16 x 2¼	4
	HW-38	Flat Washer, 3/8	8
	HNFL-38-16	Flange Whiz-loc Nut, 3/8-16	8
11	30-431	Rubber Exhaust Hanger Insulators	2
**12	32-521-11	O2 Sensor	2
**13		Muffler	1
**	32-521-05	Manifold Gasket	1
**	HBM-8-1.25 x 20	Metric Hex Bolt, #8-1.25 x 20	8
**	HWLM-8	Metric Lock Washer, M8	8
14	HBM-6-1-16	Metric Hex Bolt, #6 - 1 x 16	6
	HWLM-6	Metric Lock Washer, M6	6
15	32-593	Heat Shield	1
16	30-552	Lower Muffler Mount	1
17	30-553	Upper Muffler Mount	1
18	HB-516-1-175	Hex Bolt, 5/16 -18 1¾	2
	HW-516	Flat Washer, 5/16	2
	HNFL-516-18	Flange Whiz-loc Nut, 5/16-18	2
19	30-042-14	515 Vibration Mount	1

REAR WHEEL DRIVE DRAWING

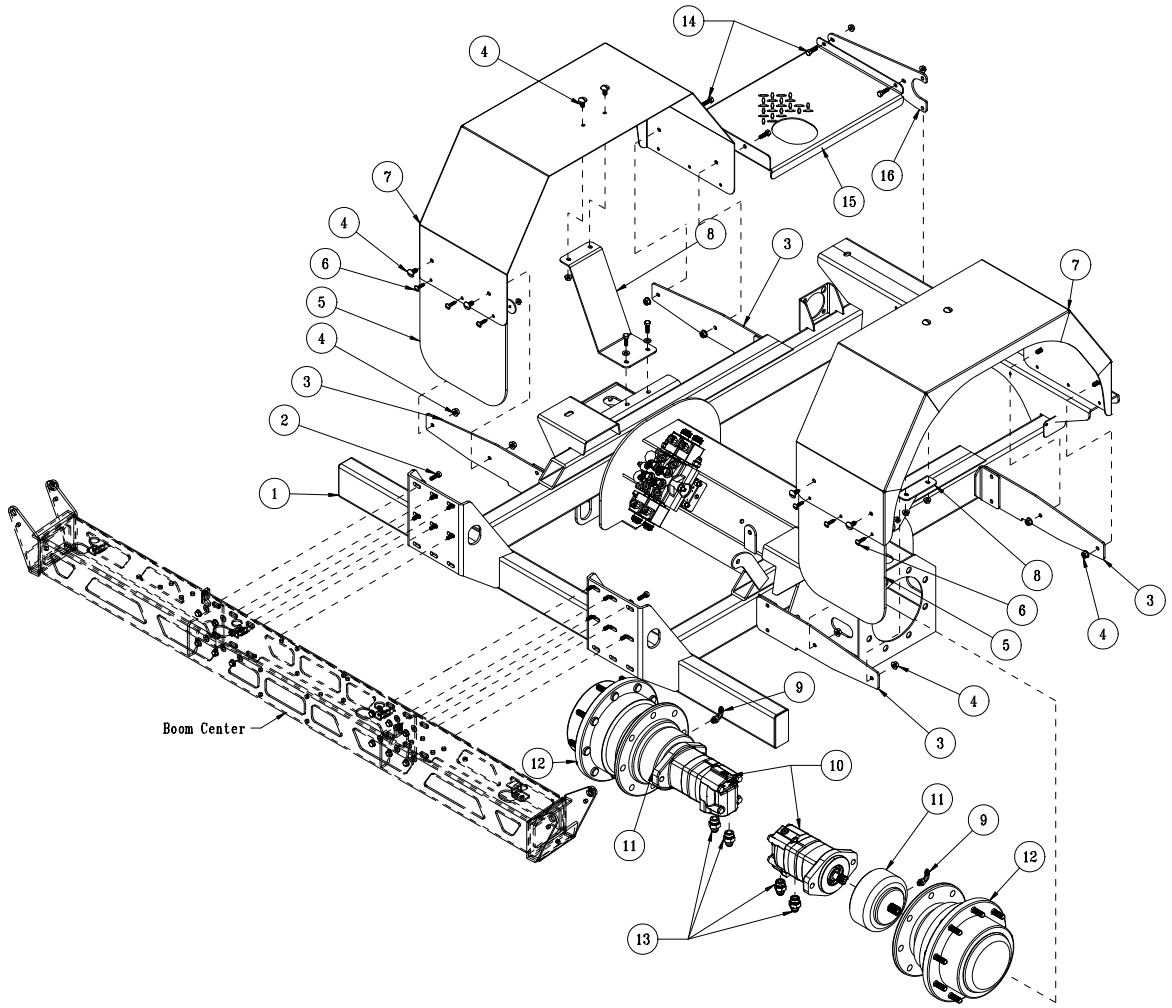

REF#	PART#	DESCRIPTION	QUANTITY
1	30-520	Main Frame	1
2	HB-38-16-125	Hex Bolt, ⅜-16-1¼	12
	HW-38-16	Flat Washer, ⅜	12
	HNFL-38-16	Flange Whiz-loc Nut, ⅜ - 18	12
3	30-561	Rear Fender Mount	4
4	HB-516-18-100	Hex Bolt, 5/16 - 18 x 1	10
	HW-516	Flat Washer, 5/16	10
	HNFL-516-18	Flange Whiz-loc Nut, 5/16 - 18	10
5	20-659	Mud Flap	2
6	HB-14-20-075	Hex Bolt, 1/4 - 20 x 3/4	6
	HWF-14-150	Fender Washer, 1/4 x 1 1/4	6
	HNFL-14-20	Flange Whiz-loc Nut, 1/4 - 20	6
7	30-550	Rear Fender	2
8	30-562	Rear Fender Support	2
9	18-232	90° Elbow	2
10	30-101	Eaton 2000 Series Hydraulic Motor	2
	30-101-11	Seal Kit	2
11	30-100	Mico Spring Hydraulic Brakes	2
12	30-099	Auburn Wheel Drive	2
13	18-343	Adapter	4
14	HB-516-18-075	Hex Bolt, 5⁄16-18 x ¾	4
	HNFL-516-18	Flange Whiz-loc Nut, 5⁄16-18	4
15	30-560	Step	1
16	30-569	Step Mount Arm	1

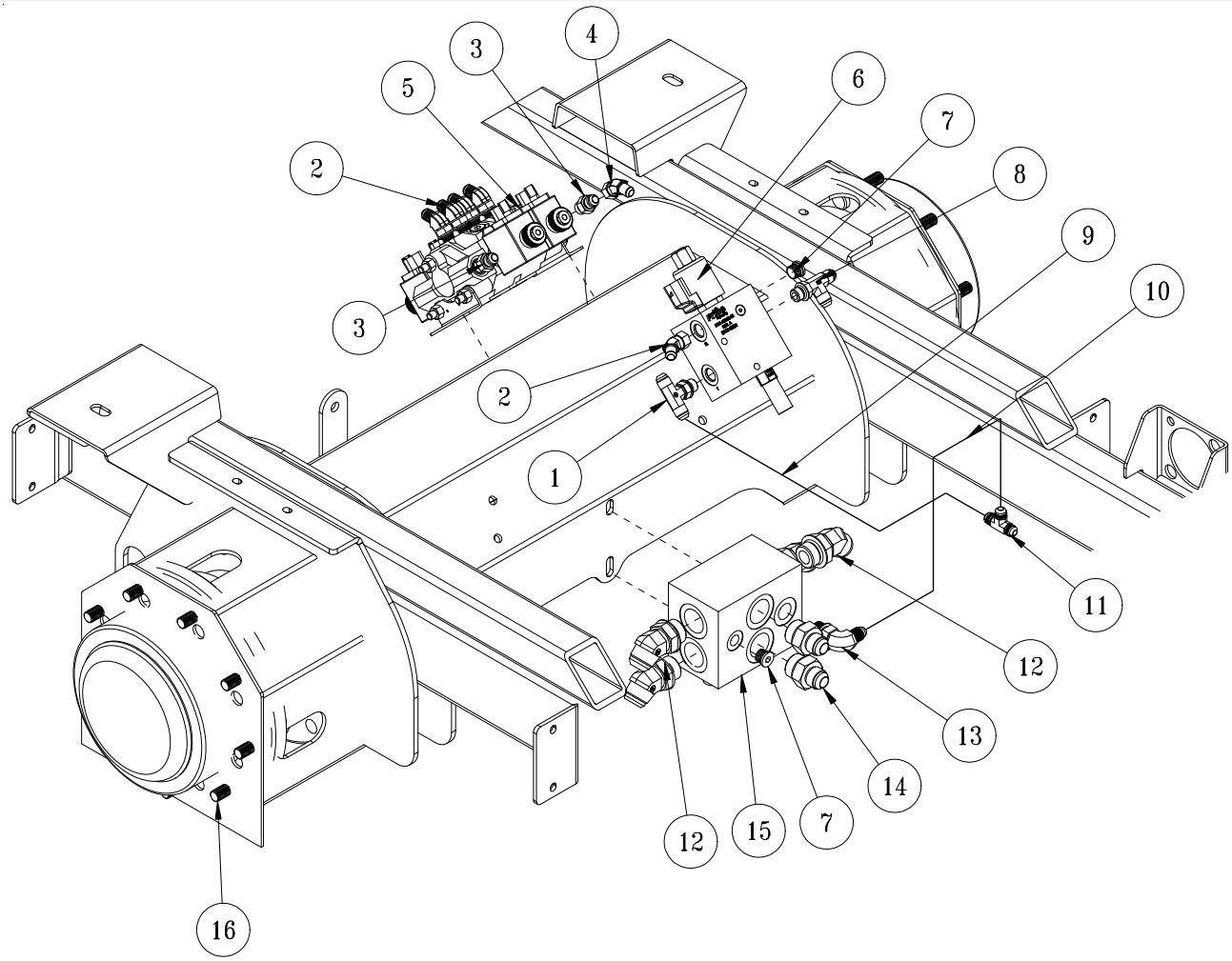

REF#	PART#	DESCRIPTION	QUANTITY
1	18-450	Branch Tee	1
2	18-188	45° Elbow	5
3	18-169	Straight Thread Adapter	2
4	18-214	45° Adapter	1
5	32-677	Boom Control Valve	1
6	30-194	Brake Manifold	1
	30-104-01	Cartridge Valve	1
	30-104-02	Coil	1
	HB-14-20-350	Hex Bolt, ¼ - 20 x 3½	2
	HNFL-14-20	Flange Whiz-loc Nut, ¼ - 20	2
7	23-126	Plug	2
8	18-518	Straight Thread Run Tee	1
9	30-418	Hydraulic Hose	1
10	30-425	Hydraulic Hose	1
11	18-173	Tee	1
12	18-517	45° Adapter	4
13	18-185	90° Adapter	1
14	15-702	Adapter	2
15	30-103	Hot Oil Shuttle Manifold	1
16	HB-58-11-200	Hex Bolt, ⅝ - 11 x 2	12
	HNFL-58-11	Flange Whiz-loc Nut, ⅝-11	12

SPRAY PUMP DRAWING

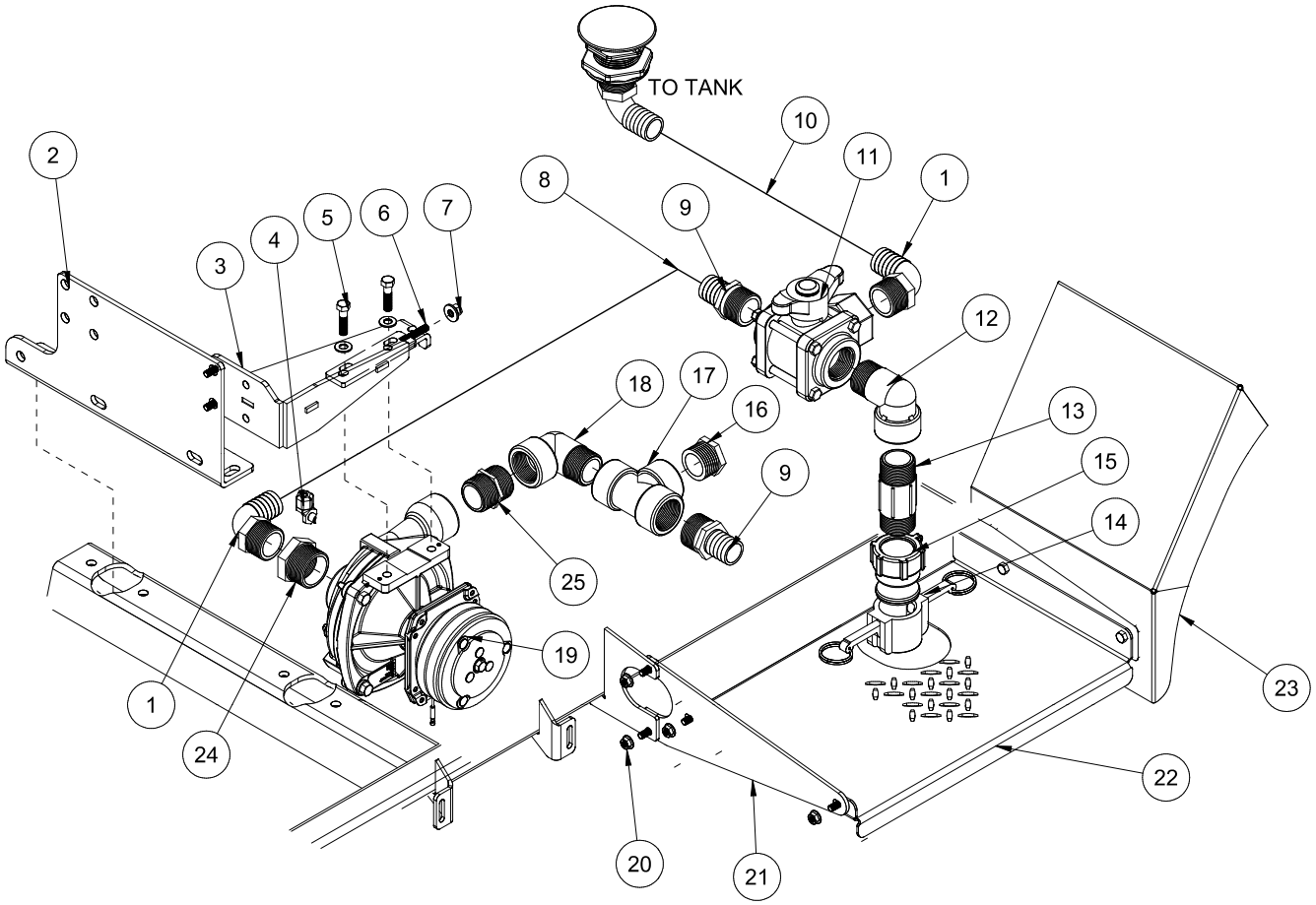

Parts

REF#	PART#	DESCRIPTION	QUANTITY
1	16-156	Elbow	2
2	30-581	Rear Engine Mount	1
3	30-537	Pump Mount	1
4	18-475	Male Elbow	1
5	HBM-10-1.5-50	Metric Bolt, 10-1.5-50	2
	HWM-10	Metric Washer, 10	2
	HW-38	Flat Washer, ⅜	2
	HNM-10-1.5	Metric Nut, 10-1.5	2
6	30-538	Pump Adjuster	1
7	HN-516-24	Hex Nut, 5⁄16 - 24	1
	HW-516	Flat Washer, 5⁄16	1
8	8897	1 1⁄4" Discharge Hose	28"
	18-116-P	Hose Clamp	2
9	16-161	Fitting	2
10	8897	1 1⁄4" Discharge Hose	18"
	18-116	Hose Clamp	2
11	18-372	3-Way Valve	1
	18-372-01	Handle	1
12	16-972	90° Elbow	1
13	18-389	Nipple, 1¼" x 4	1
14	16-935	Quick Coupler Cap	1
15	15-986	Quick Coupler Cam Lock Adapter	1
16	10-389	Plug	1
17	18-390	Tee	1
18	16-972	90° Elbow	1
19	15-984	Hypro Pump	1
	33-480	Pressure Switch	1
20	HB-516-18-075	Hex Bolt, 5⁄16-18 x ¾	4
	HNFL-516-18	Flange Whiz-loc Nut, 5⁄16-18	4
21	30-569	Step Mount Arm	1
22	30-560	Step	1
23	30-550	Rear Fender	2
24	16-973	Hex Bushing	1
25	16-880	Close Nipple	1

TANK DRAWING

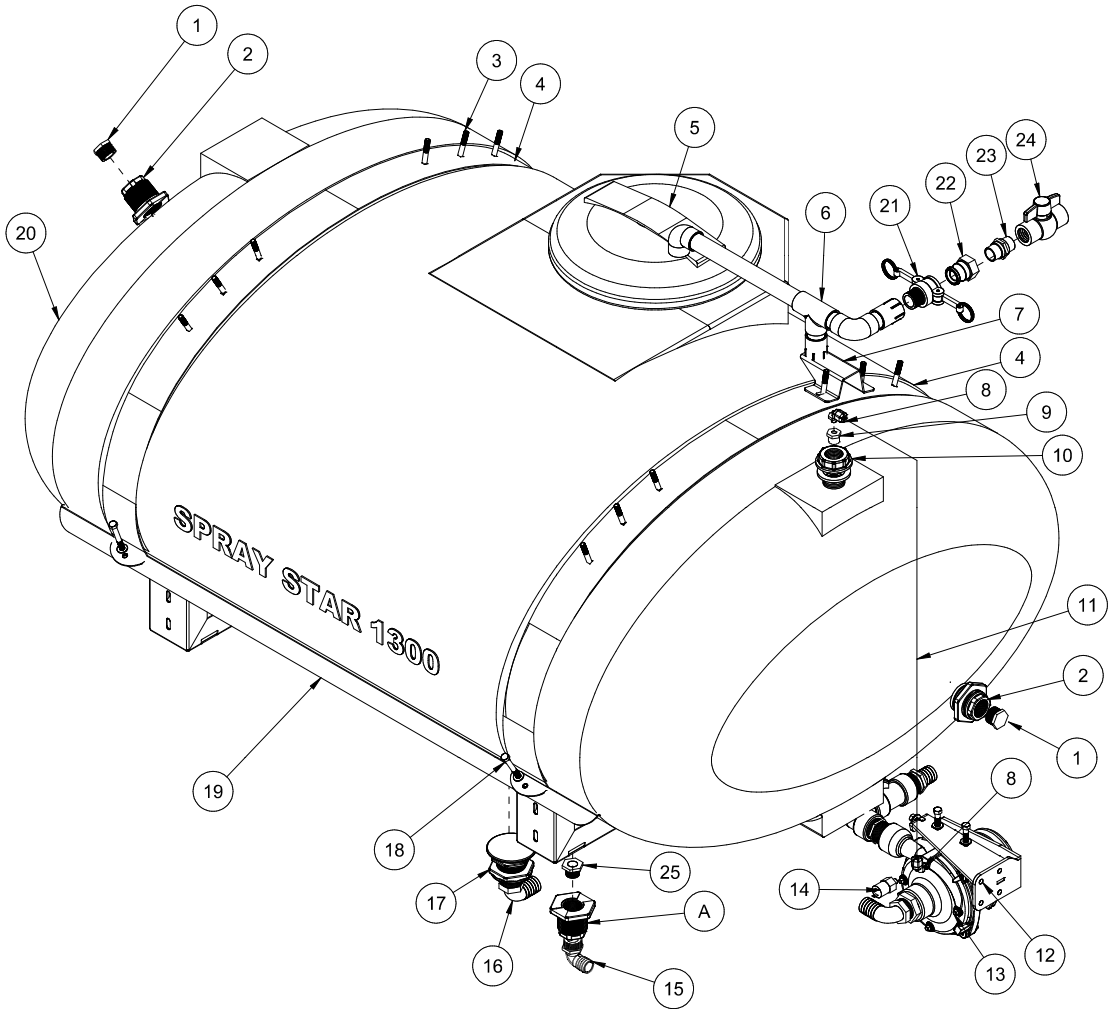

Parts

REF#	PART#	DESCRIPTION	QUANTITY
1	16-162	Hex Plug, 1"	2
2	16-945	Double Thread Fitting	2
3	HBCL-516-18-100	Low Shoulder Carriage Bolt, 5/16-18 x 1	12
	9063	Bolt Caps	12
	HNFL-516-18	Flange Whiz-loc Nut. 5/16-18	2
4	30-522	Tank Strap	2
5	16-220	Replacement Lid	1
6	30-450	Air Gap Filler	1
7	30-527	Air Gap Filler Mount	1
8	18-475	Male Elbow	2
9	33-496	Reducer Bushing	1
10	33-495	Bulkhead Fitting	1
11	9038	Tubing	40"
12	30-537	Pump Mount	1
13	15-984	Hypro Pump	1
14	30-480	Sensor	1
15	16-168	Elbow, 1¼ MPT x 1HB	1
16	16-156	Elbow, 1¼	1
17	16-194	Anti-Vortex Fitting	1
18	HB-38-16-275	Hex Bolt, ⅜ - 16 x 2¾	4
	HW-38	Flat Washer, ⅜	4
	HNTL-38-16	Lock Nut, ⅜ - 16	4
19	30-545	Tank Carrier	1
20	31-302	300 Gallon Poly Tank	1
21	16-962	Coupler	1
22	16-961	Adapter	1
23	16-851	Close Nipple	1
24	18-448	PVC Ball Valve	1
25	18-388	Reducer Bushing. 1¼ x ¾	1
A	Comes with tank. Order parts below for replacement.		
	16-945	Double Thread Fitting	1
	16-163	Reducer Bushing. 1 x ¾	1
	16-164	Elbow, 1"	1

TURBO-QUAD AGITATOR

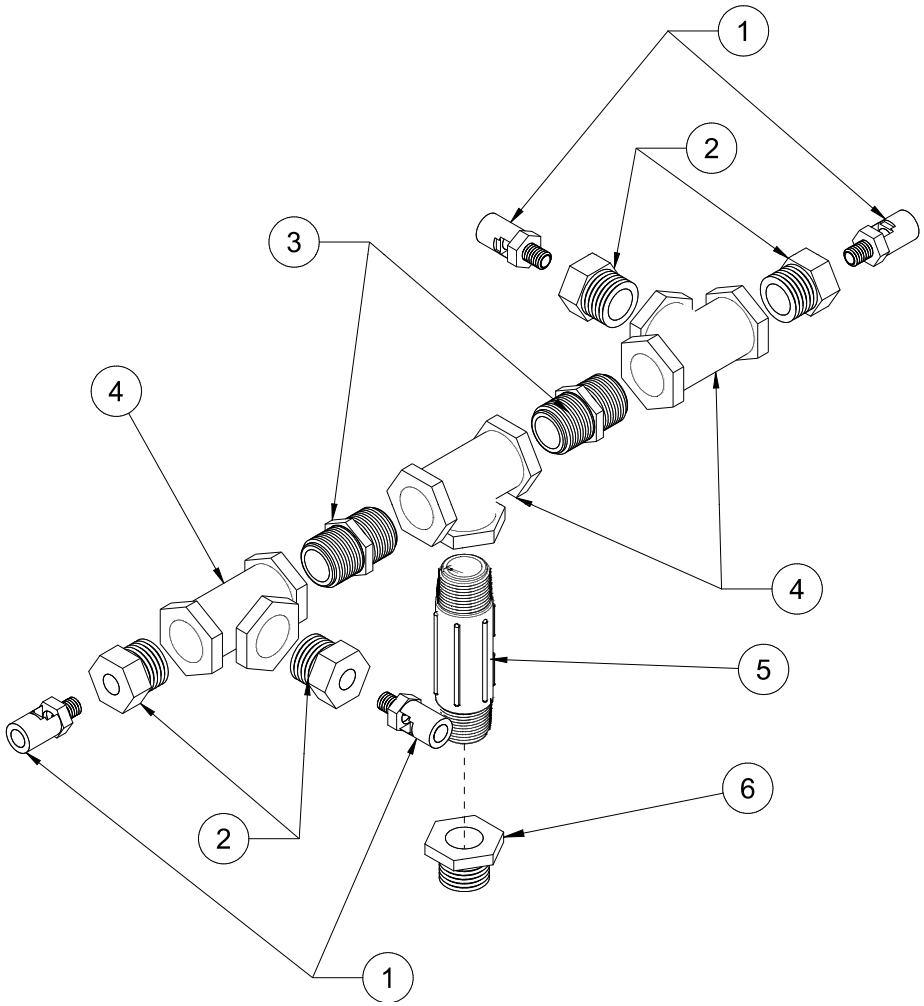

REF#	PART#	DESCRIPTION	QUANTITY
1	18-510	Mini Eductor	4
2	16-288	Reducer, $^3/_4$ x $^1/_4$	4
3	16-158	Close Nipple, $^3/_4$ x $^3/_4$	2
4	16-157	Female Pipe Thread Tee, $^3/_4$ x $^3/_4$ x $^3/_4$	3
5	16-172	Nylon Nipple, $^3/_4$ NPT x $3^1/_2$	1
6	16-163	Nipple	1

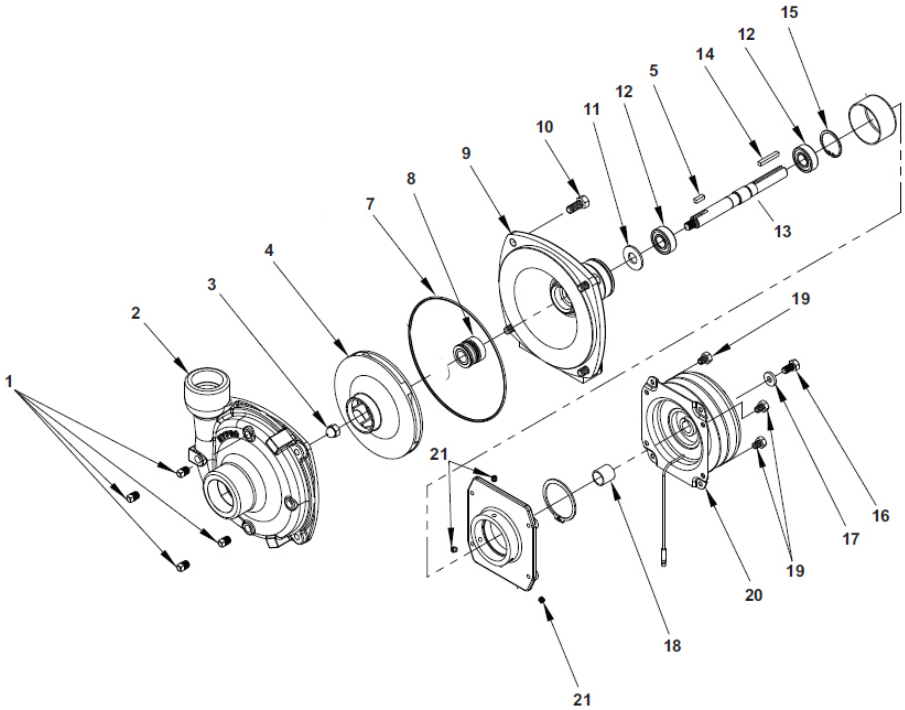

⚠ IMPORTANT **WHEN SERVICING THE SPRAY PUMP OR FILTER, ALL CONTROL VALVES MUST BE SHUT OFF IF THERE IS LIQUID IN THE TANK.**

REF#	PART#	DESCRIPTION	QUANTITY
1	16-998-01	Drain Plug	4
2	16-998-02	Pump Casing	1
3	16-998-03	Impeller Nut	1
4	16-966-16	Impeller	1
5	16-966-11	Key	1
7*	16-998-04	O-Ring	1
8*	16-967	Mechanical Seal (Silicon Carbide)	1
9	16-998-06	Mounting Flange	1
10	16-998-07	Hex Bolt	
11	16-966-06	Slinger Ring	1
12	16-966-10	Ball Bearing	2
13	16-966-12	Pump Shaft	1
14	16-822-20	Key	1
15	16-966-13	Bearing Retainer	1
16	16-994-05	Hex Bolt	1
17	16-994-06	Retaining Washer	1
18	16-994-03	Spacer	1
19		Hex Bolt	4
20	16-994-01	Clutch	1
21	16-994-04	Set Screw	3
	16-998-12	Pump Only	
*	16-967	Silicone - Carbon Seal Kit	

34-103 ORBITAL DRAWING

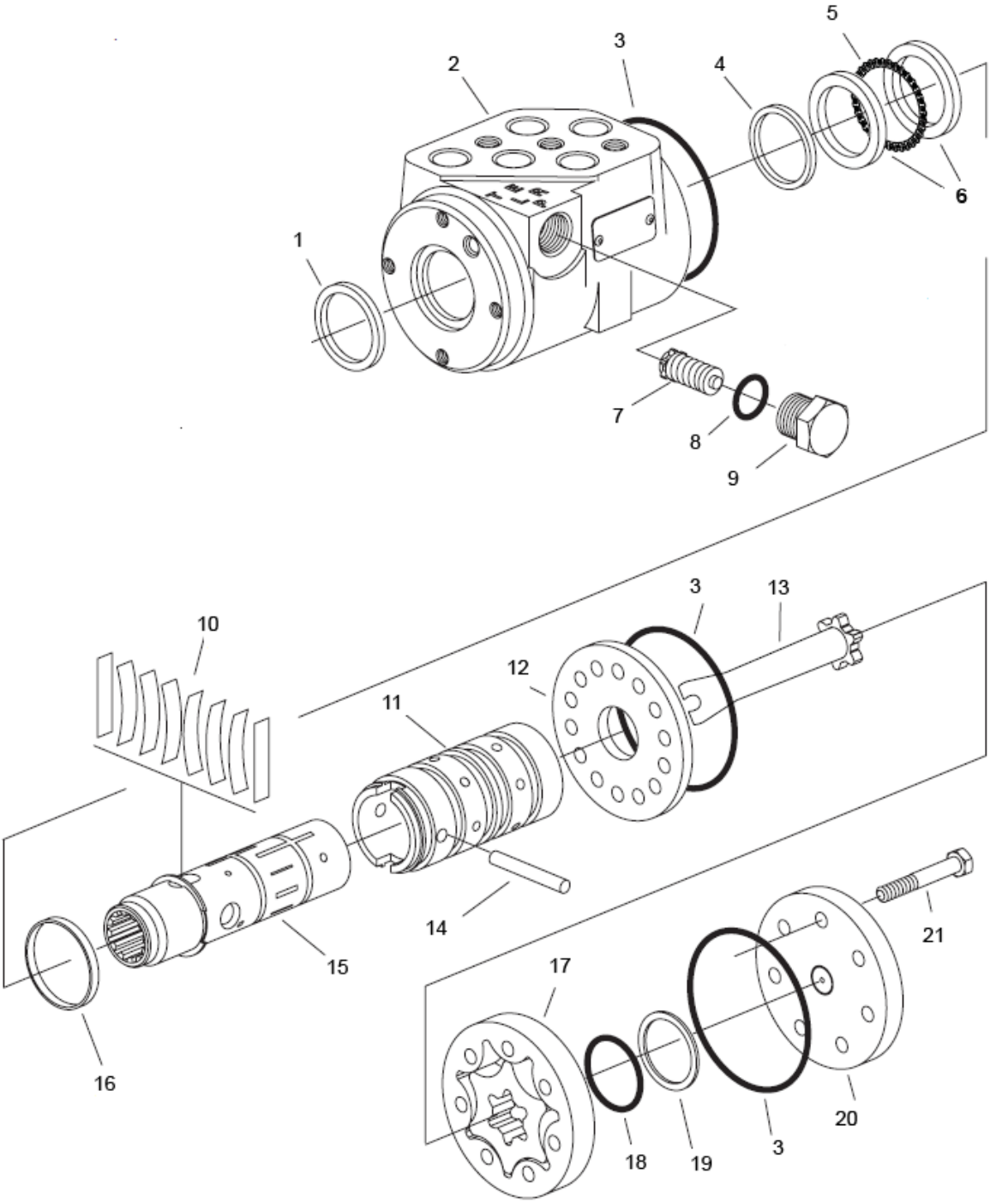

REF #	PART #	DESCRIPTION	QUANTITY
1**		Dust Seal	1
2		Housing	1
3**		O-Ring Seal	3
4**		Quad Seal	1
5	10-576-03	Thrust Bearing	1
6	10-576-02	Bearing Race	2
7		Manual Steering Relief Valve	1
8**		O-ring	1
9		Plug	1
10‡		Standard Torque Centering Springs	1
11		Sleeve	1
12	15-301-06	Wear Plate	1
13	10-576-01	Drive	1
14	15-301-08	Drive Pin	1
15		Spool	1
16‡		Spring Retaining Ring	1
17	34-103-01	Gerotor	1
18**		O-Ring	1
19**		Seal Ring	1
20	15-301-03	End Cap	1
21	10-576-06	Cap Screw	7
**	15-301-01	Seal Kit	1
‡	15-301-15	Centering Spring Kit	1

Orbital Specifications

Inlet Relief Valve Setting	1020 psi (70 bar)
Nominal Flow	3 gpm (11lpm)
Displacement	6.1 cu. in/ R (100 cu cm/R)
Check Valve for Manual Steering	Yes
Return Pressure Rating	145 psi (10 bar) Maximum
Fluid	SAE 10W-40 API Service SJ or higher Motor Oil
Ports	$^{9}/_{16}$ - 18 SAE O-Ring 4 Ports

76-197 EATON GEAR PUMP

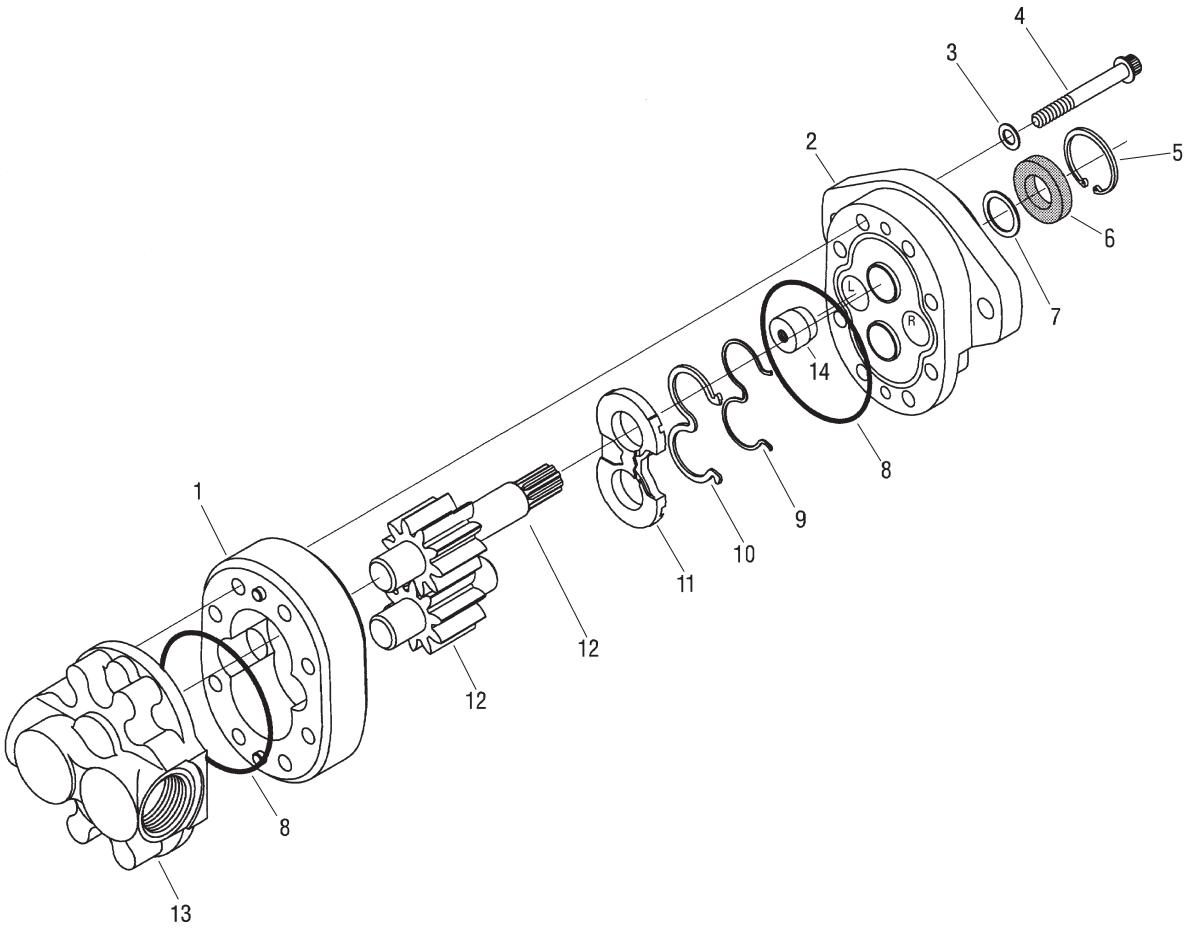

REF#	PART#	DESCRIPTION	QUANTITY
1		Body	1
2	76-197-01	Front Plate	1
3*		Washer	4
4	76-197-06	Cap Screw	8
5	76-197-07	Retaining Ring	1
6*		Shaft Seal	1
7	33-061-15	Washer	1
8*		O-Ring	2
9*		Backup Gasket	1
10*		Seal	1
11*		Wear Plate	1
12	76-197-04	Shaft (comes with Idler Gear)	1
13	76-197-02	Back Plate	1
14*		Plug	1
*	76-197-08	Seal Kit	

30-101 EATON MOTOR DRAWING

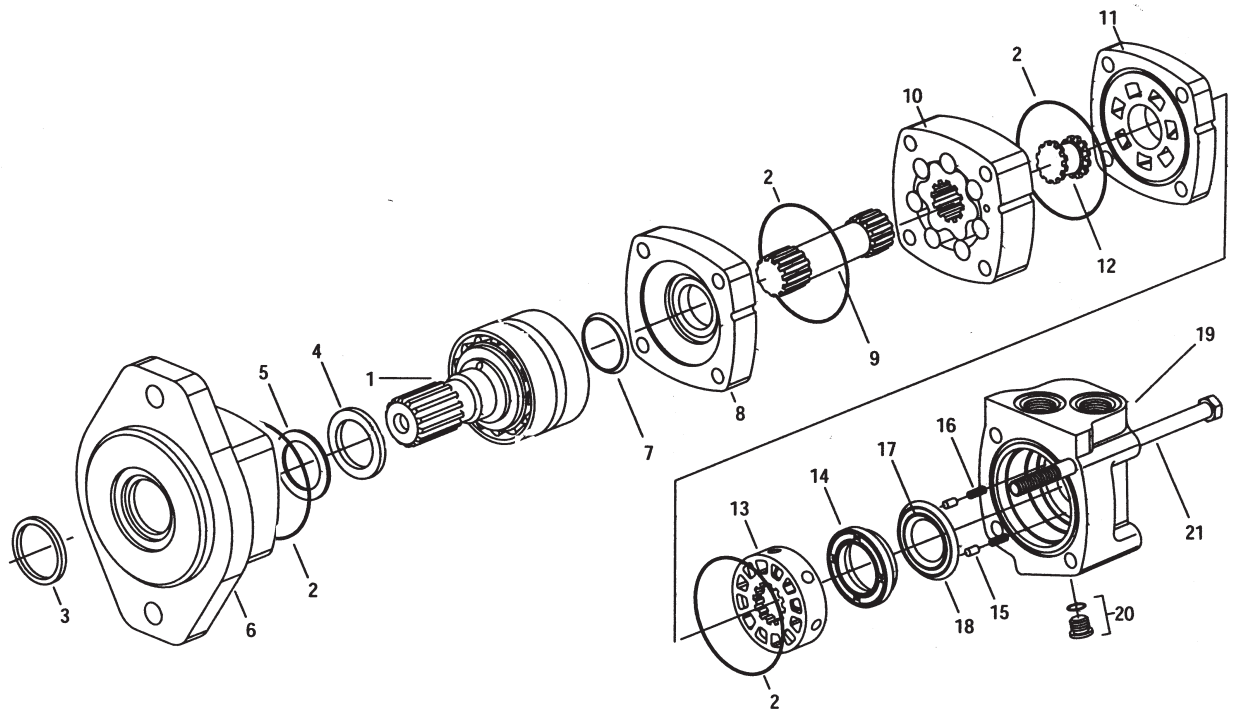

REF#	PART#	DESCRIPTION	QUANTITY
1	30-101-01	Shaft and Bearing Kit ($^7/_8$ splined 13T)	1
2*		Seal	4
3*		Exclusion Seal	1
4*		Shaft Seal	1
5*		Back Up Ring	1
6	30-101-02	Bearing Housing	1
7*		Shaft Face Seal	1
8	30-101-03	Wear Plate	1
9	30-101-04	Main Drive	1
10	30-101-05	Geroter	1
11	30-101-06	Valve Plate	1
12	14-207	Valve Drive	1
13	14-208	Valve	1
14	30-101-07	Balance Ring	1
15	14-210	Balance Ring Pin	2
16	14-209	Compression Spring	2
17*		Inner Face Seal	1
18*		Outer Face Seal	1
19	30-101-08	Valve Housing	1
20	30-101-09	Plug Assembly	1
*		O-ring	1
21	30-101-10	Cap Screw	4
*	30-101-11	Seal Kit	
NS	30-101-12	Allen Head Bolts	2
NS	30-101-13	Washers	2

30-423 EATON PUMP DRAWING

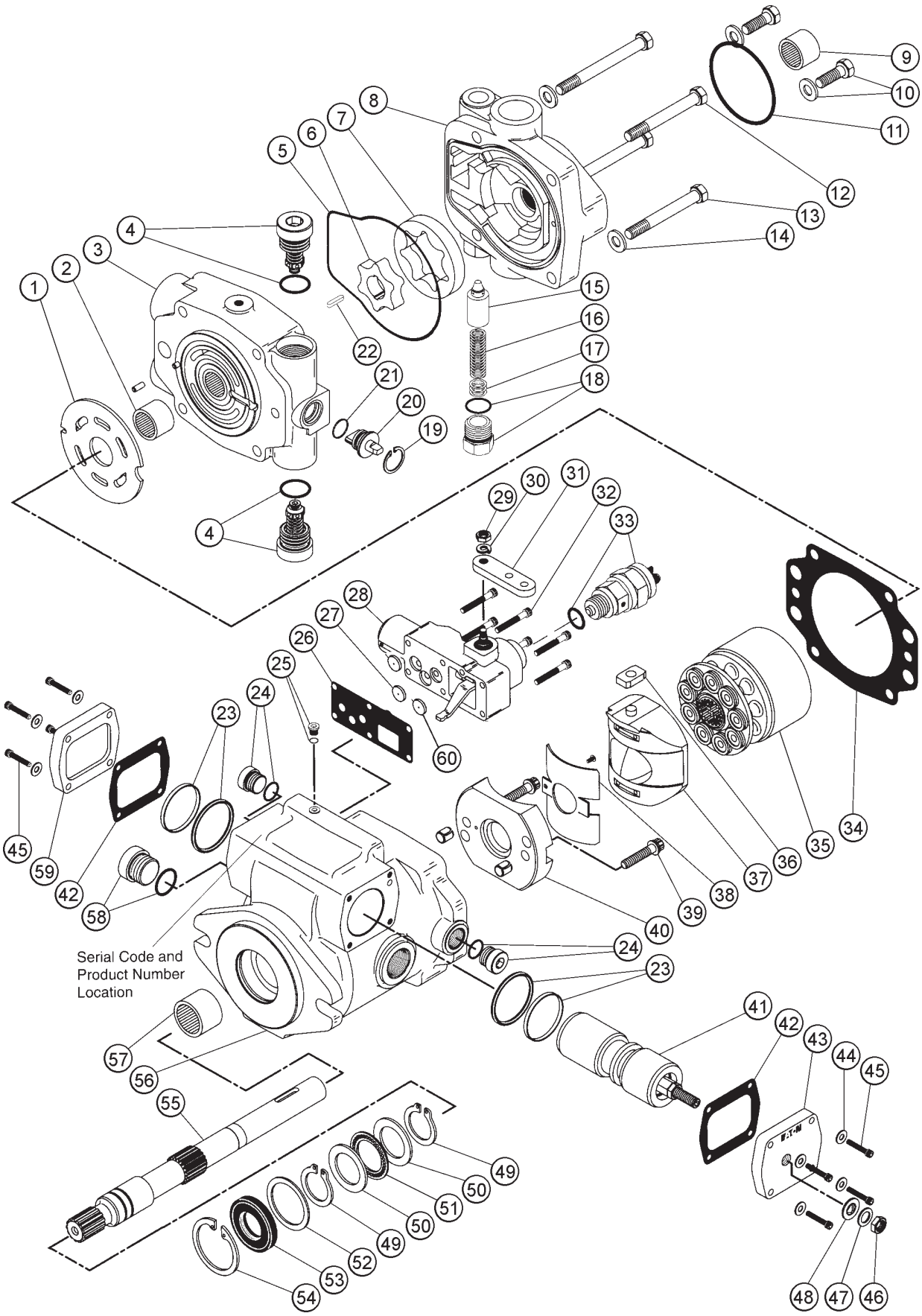

Parts

REF#	PART#	DESCRIPTION	QUANTITY
1	33-058-16	Valve Plate (CW Rotation)	1
2	33-058-26	Bearing (Press Fit)	1
3		Back Plate Assembly	1
4		Relief Valve S/A	2
*		O-Ring	2
5*		Molded O-Ring	1
6	33-058-38	Inner Ring Gerotor	1
7	33-058-39	Outer Ring Gerotor	1
8	33-058-35	Charge Pump Adapter Assembly	1
9	33-058-46	Bearing (Press Fit)	1
10		Hex Bolt and Washer	2
11*		O-Ring	1
12	33-058-14	Cap Screw, $^3/_8$ - 16 x 4	2
13	33-058-13	Cap Screw, $^3/_8$ - 16 x $3^1/_2$	2
14		Washer	4
15		Poppet	1
16	33-058-49	Spring	1
17	33-058-48	Shims	As Required
18	33-058-47	Plug	1
*		O-Ring	1
19*		Retaining Ring	1
20		Bypass Valve Actuator	1
21*		O-Ring	1
22	33-058-34	Key	1
23*		Seal Sub-Assembly	2
24	33-058-32	Plug S/A	2
*		O-Ring	2
25	33-058-19	Plug Sub-Assembly	1
*		O-Ring	1
26*	30-102-04	Control Housing Gasket	1
27	33-058-40	Supply Valve Orifice	1
28	33-058-37	Servo Control Assembly	1
29	33-058-29	Nut	1
30	33-058-30	Lock Washer	1
31	33-058-36	Control Arm	1
32	33-058-15	Cap Screw	6
33*	32-102-01	Interlock Switch	1
34*		Housing Gasket	1
35	33-058-04	Rotating Kit Assembly	1
36	33-058-06	Servo Piston Follower	1
37	33-058-09	Swash Plate S/A	1
38		Bushing	1
39		Cap Screw	2
40		Cradle Sub-Assembly	1
41		Servo Piston Assembly	1
42*		Cover Plate Gasket	2
43	33-058-08	Cover Plate	1
44	33-058-43	Washer	8
45	33-058-03	Cap Screw, #10 - 24 x 1	8
*	33-058-01	Seal Repair Kit	

(Continued on next page)

30-423 EATON PUMP DRAWING

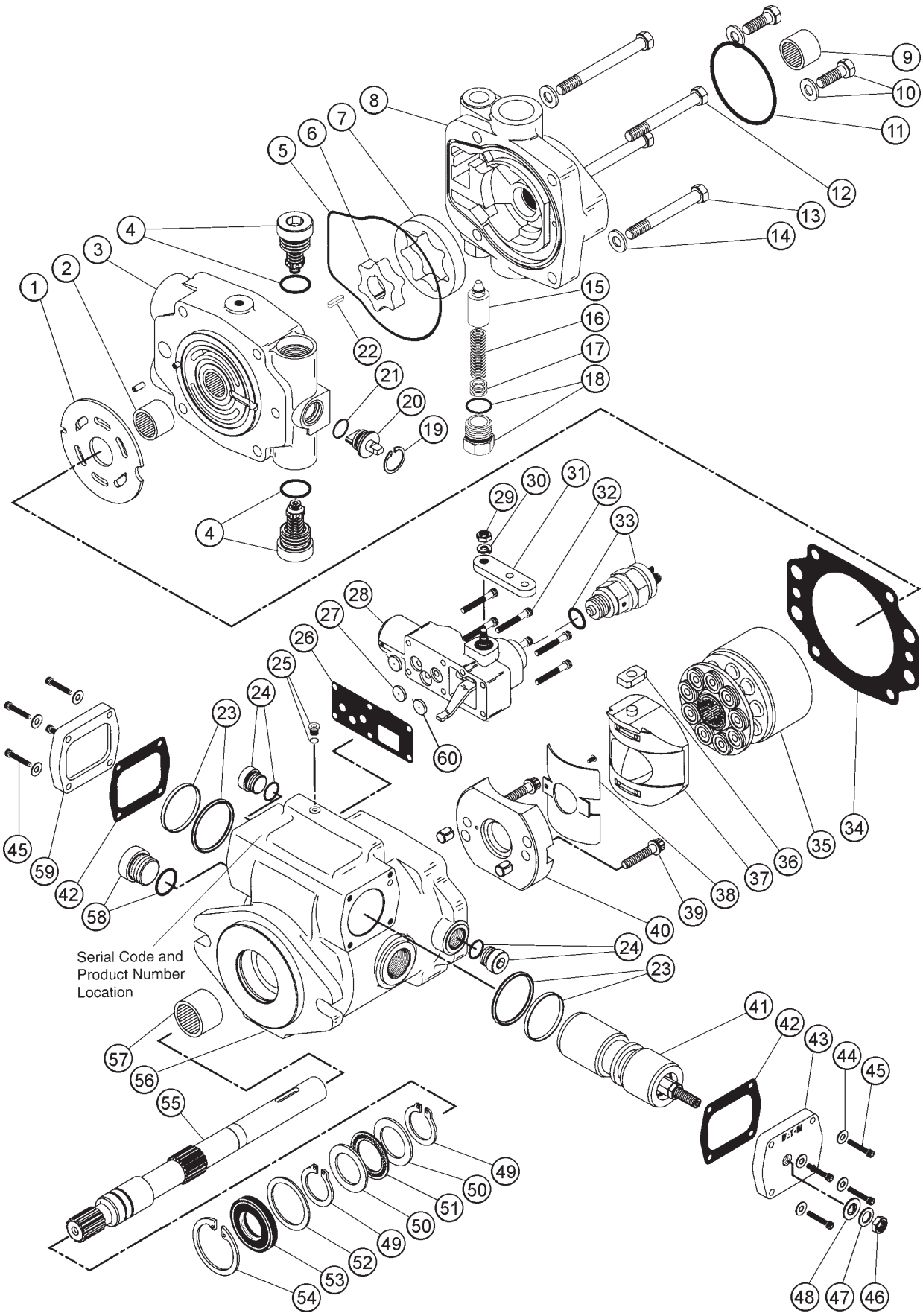

Parts

REF#	PART#	DESCRIPTION	QUANTITY
46	33-058-02	Jam Nut	1
47	33-058-42	Washer	1
48*		Seal Washer	1
49*		Retaining Ring	2
50	33-058-10	Thrust Race	2
51	33-058-11	Thrust Bearing	1
52	33-058-31	Washer	1
53*	33-058-52	Shaft Seal	1
54*		Retaining Ring	1
55	33-058-28	Drive Shaft	1
56		Housing Assembly	1
57	33-058-18	Bearing (Press Fit)	1
58	33-058-33	Plug S/A	1
*		O-Ring	1
59	33-058-07	Cover Plate	1
60	33-058-51	Control Valve Orifice	2
*	33-058-01	Seal Repair Kit	
See Below	30-102-01	Lockout Switch(included in Seal Repair Kit)	1
See Below	30-102-02	Wiper Seal (included in Seal Repair Kit)	1
NS	30-102-03	O-Ring (included in Seal Repair Kit)	1
NS	23-145	O-ring (between gear pump and hydro pump)	

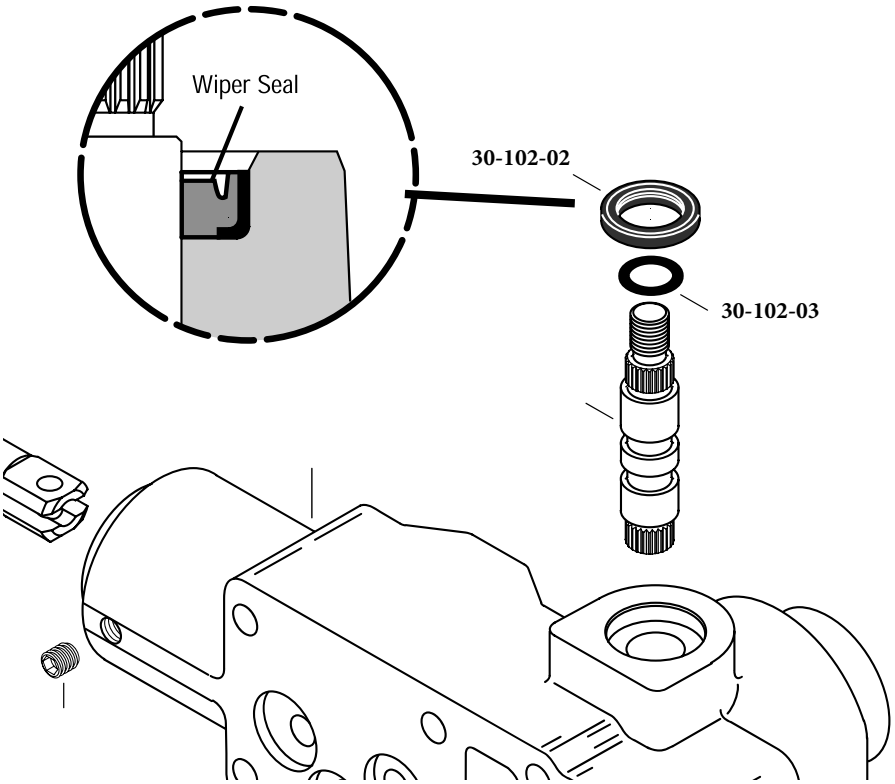

30-099 AUBURN ® POWER WHEEL DRAWING

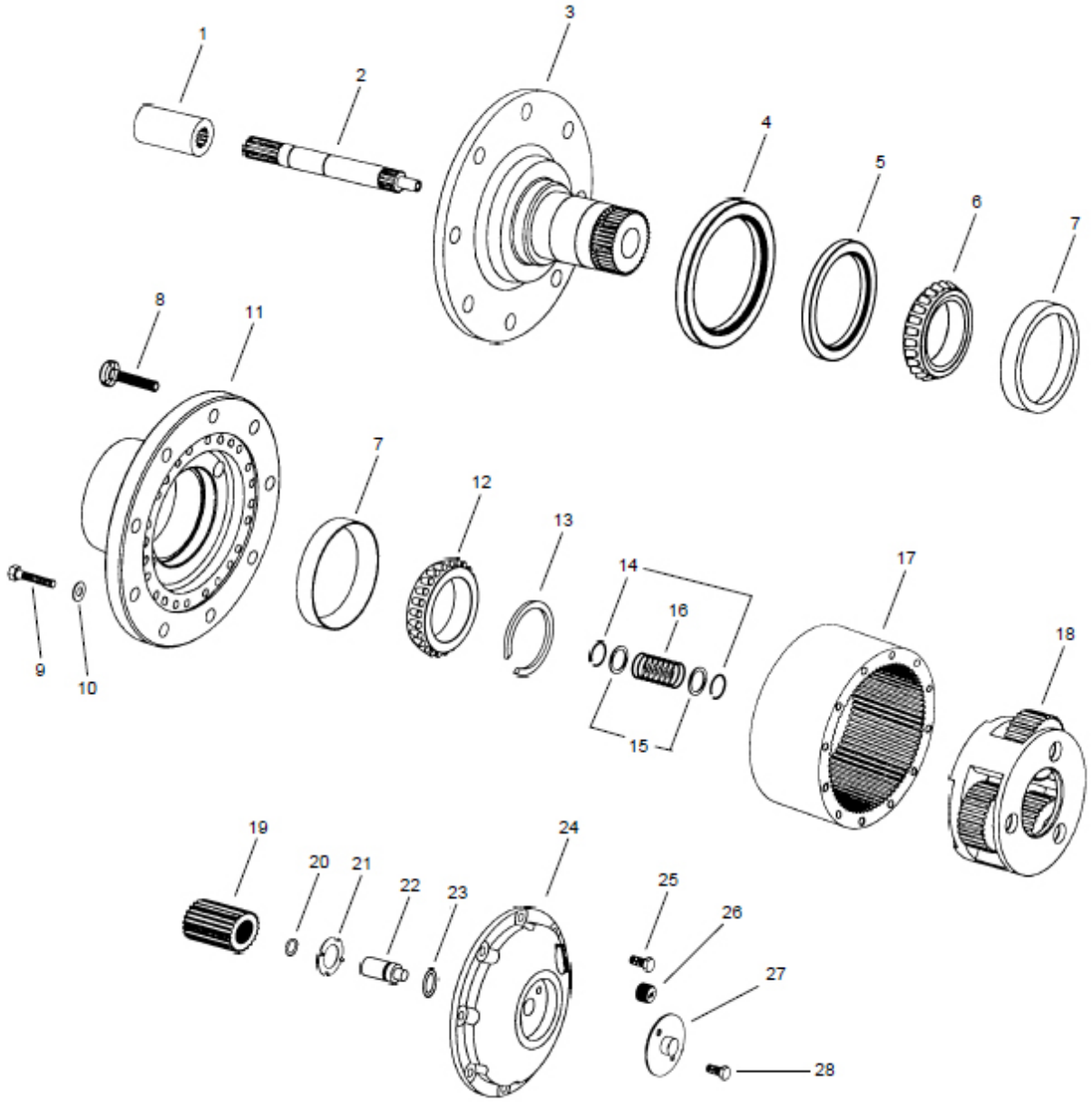

Parts

30-099 AUBURN ® POWER WHEEL PARTS LIST

REF#	PART#	DESCRIPTION	QUANTITY
1		Coupling	1
2		Input Shaft	1
3		Spindle	1
4 †	30-099-02	Boot Seal	1
5*†	30-099-06	Oil Seal	1
6*		Bearing Cone	1
7*		Bearing Cup	2
8		Wheel Hex Bolt	9
9		Hex Head Hex Bolt (Grade 8)	6-12
10		Flat Washer	6-12
11		Hub	1
12*		Bearing Cone	1
13*†		Retaining Ring Kit	1
14	30-099-04	Retaining Ring	2
15		Washer	2
16	30-099-03	Disengage Spring	1
17		Ring Gear	1
18		Carrier Assembly	1
19		Sun Gear	1
20		Retaining Ring	1
21	30-099-07	Thrust Washer	1
22		Disengage Plunger	1
23*†		O-ring	1
24		Large Cover	1
25		Hex Head Hex Bolt	8
26		Magnetic Plug	1
27		Disengage Cover	1
28		Hex Head Hex Bolt	2
29		Quick Disconnect Gasket	1
30		Quick Disconnect Assembly	1
31		Hex Head Hex Bolt	2
*	30-099-05	Bearing and Seal Kit	
†	30-099-01	Seal Kit	
	API-GL-5 80W/90	Gear Oil	25 oz.

30-100 BRAKE DRAWING

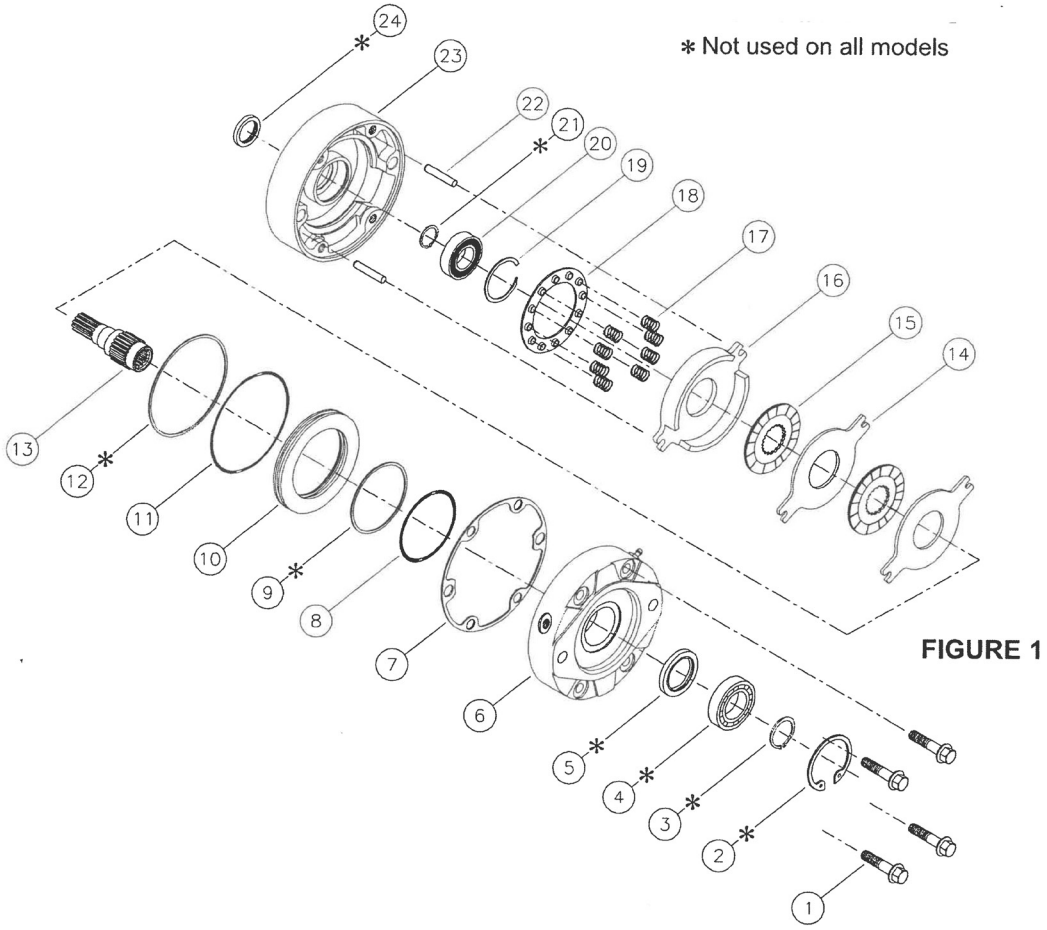

FIGURE 1

Parts

30-100 BRAKE PARTS LIST

REF#	PART#	DESCRIPTION	QUANTITY
1		Cap Screws	4
2*		Retaining Ring	1
3*		Retaining Ring	1
4*		Bearing	1
5*†		Oil Seal	1
6		Pressure Plate	1
7*†‡		Case Seal	1
8†		O-ring	1
9†		Back-up Ring	1
10		Piston	1
11†		O-ring	1
12†		Back-up Ring	1
13		O-ring	1
14‡		Stator Disc	2
15‡		Rotor Disc	2
16‡		Return Plate	1
17		Red Springs	8
18		Spring Retainer	1
19*		Retaining Ring	1
20*		Bearing	1
21*		Retaining Ring	1
22		Dowel Pin	2
23		Cover	1
24*†		Oil Seal	1
‡	30-100-01	Lining Kit (includes 7, 14, 15, 16)	1
†	30-100-02	O-ring Kit (includes 5, 7, 8, 9, 11, 12, 24)	1
*	30-100-03	Bearing Kit (includes 2, 3, 4, 5, 7, 19, 20, 21, 24)	1
	30-100-04	Gasket	1

1302 PLUMBING DRAWING (RADION® 8140)

15-817 #50 Fitting O-ring
15-818 #75 Fitting O-ring

Boom	Left Hose	Center Hose	Right Hose
18'	9032-116	9032-86	9032-128
20'	9032-126	9032-86	9032-138
24'	9032-146	9032-86	9032-158

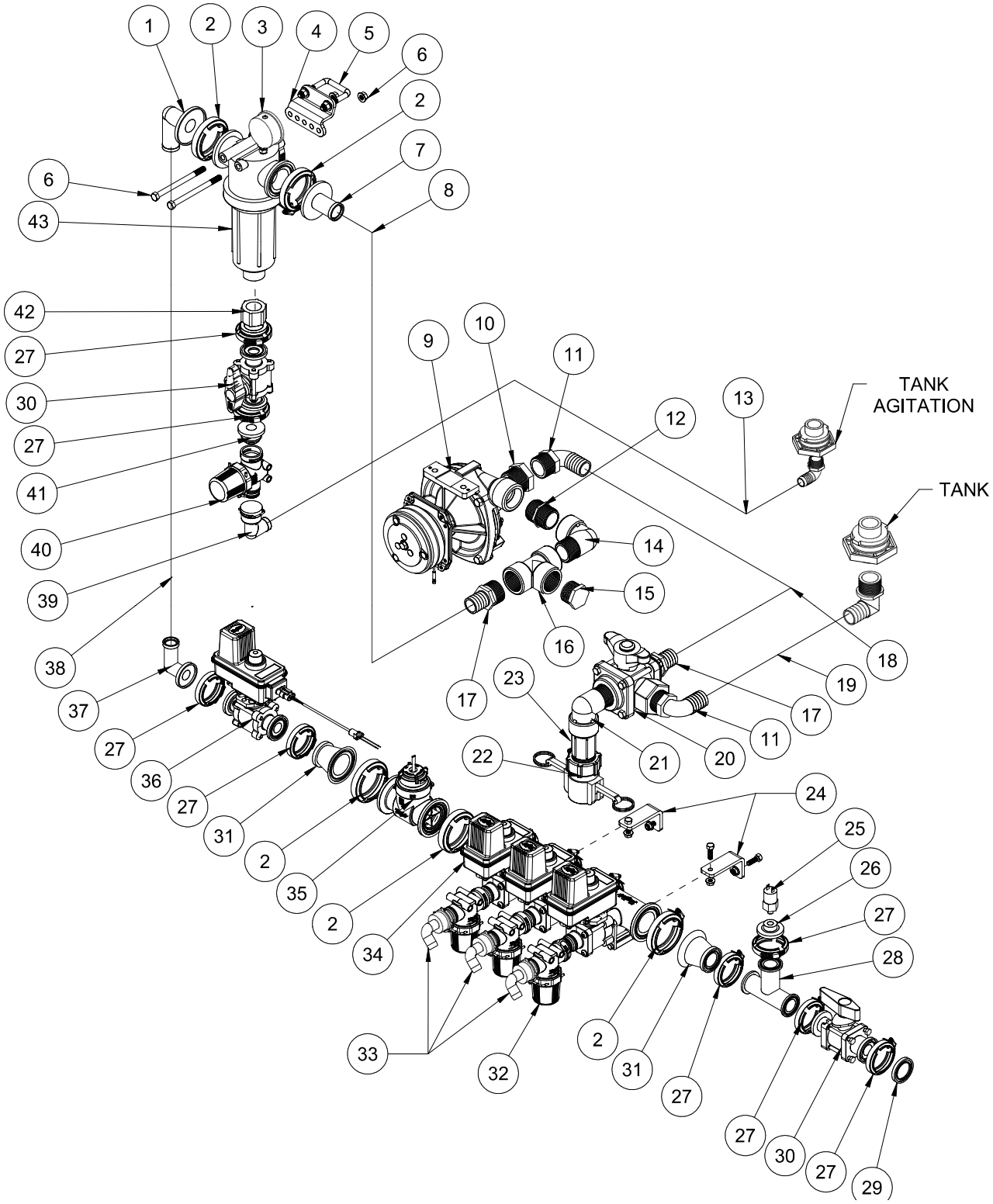

Parts

1302 PLUMBING PARTS LIST (RADION® 8140)

REF#	PART#	DESCRIPTION	QUANTITY
1	15-739	#75 x 90° x 1 1/4 Hose Barb	1
2	15-741	#75 Series Clamp	5
3	16-281	Liquid Filled Gauge	1
4	30-551	Filter Mount	1
5	17-537	Square U-bolt	1
6	HB-38-16-500	Hex Bolt, 3/8 - 16 x 5	2
	HNFL-38-16	Flange Whiz-loc Nut, 3/8 - 16	2
7	15-744	#75 x 1¼ Hose Barb	1
8	8897	1 1/4" Discharge Hose	41"
	18-116	Hose Clamp	2
9	15-984	Hypro Spray Pump	1
10	16-973	Hex Bushing	1
11	16-156	Elbow	2
12	16-880	Nipple	1
13	8896	1" Discharge Hose	65"
	18-116	Hose Clamp	2
14	16-972	90° Elbow	1
15	10-389	Plug	1
16	10-390	Tee	1
17	16-161	Fitting	2
18	8897	1 1/4" Discharge Hose	28"
	18-116	Hose Clamp	2
19	8897	1 1/4" Discharge Hose	18"
	18-116	Hose Clamp	2
20	18-372	3-Way Valve	1
	18-372-01	Handle	1
21	16-972	90° Elbow	1
22	16-935	Quick Coupler Cap	1
	15-986	Cam Lock Adapter	1
23	18-389	4" Nipple	1
24	30-579	Valve Mount	2
	HB-516-18-100	Hex Bolt, 5/16 - 18 x 1	4
	HNFL-516-18	Flange Whiz-loc Nut 5/16 - 18	4
25	20-670-04	Pressure Sensor	1
26	15-777	Gauge Port Flange	1
27	15-740	#50 Series Clamp	8
28	15-776	#50 Tee	1
29	15-778	#50 Blank Gauge Port	1
30	15-738	Flanged Ball Valve	2
31	15-748	Reducer Coupling	2
32	14-607	Strainer, QC 100 MEsh	3
33	15-553	3/4" - 90° Hose Barb	3
	15-553-01	Clip	3
	15-553-02	O-ring	3
34	15-743	Manifold Valve	1
35	20-684	#802 Flow Meter	1
36	20-785	Regulating Valve	1
37	15-976	#50-90° x 1¼ Hose Barb	1
38	8897	1 1/4" Discharge Hose	31"
	18-116	Hose Clamp	2
39	14-671	Elbow 90°	1
40	14-801	Agitator Line Strainer, 50 Mesh	1
	14-802	Replacement 50 Mesh Screen	
	14-803	Decal, Clean Agitation Strainer	1
41	15-825	#50 Male Quick Coupler	1
42	15-735	#50 x 1 Female Pipe Thread Fitting	1
43	15-737	Flanged Strainer	1
	16-968-03	Screen (50 mesh)	1

1304 PLUMBING DRAWING (TEEJET 744®)

15-817 #50 Fitting O-ring
15-818 #75 Fitting O-ring

Boom	Left Hose	Center Hose	Right Hose
18'	9032-116	9032-86	9032-128
20'	9032-126	9032-86	9032-138
24'	9032-146	9032-86	9032-158

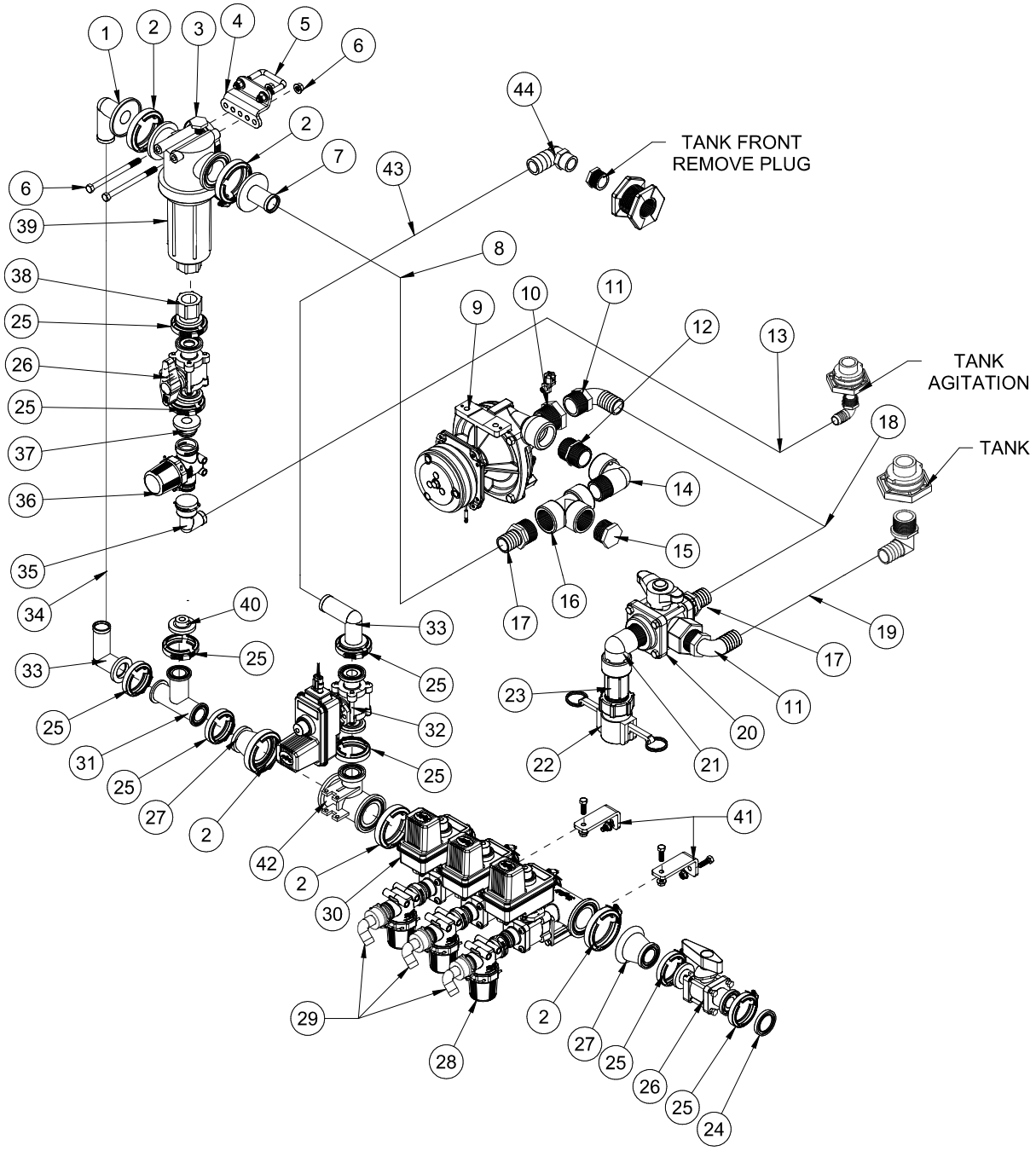

1304 PLUMBING PARTS LIST (TEEJET 744®)

REF#	PART#	DESCRIPTION	QUANTITY
1	15-739	#75 x 90° x 1¼ Hose Barb	1
2	15-741	#75 Series Clamp	5
3	15-780	Poly Hex Plug	1
4	30-551	Filter Mount	1
5	17-537	Square U-bolt	1
6	HB-38-16-500	Hex Bolt, ⅜ - 16 x 5	2
	HNFL-38-16	Flange Whiz-loc Nut, ⅜ - 16	2
7	15-744	#75 x 1¼ Hose Barb	1
8	8897	1¼" Discharge Hose	41"
	18-116	Hose Clamp	2
9	15-984	Hypro Spray Pump	1
10	16-973	Hex Bushing	1
11	16-156	Elbow	2
12	16-880	Nipple	1
13	8896	1" Discharge Hose	65"
	18-116	Hose Clamp	2
14	16-972	90° Elbow	1
15	10-389	Plug	1
16	10-390	Tee	1
17	16-161	Fitting	2
18	8897	1¼" Discharge Hose	28"
	18-116	Hose Clamp	2
19	8897	1¼" Discharge Hose	18"
	18-116	Hose Clamp	2
20	18-372	3-Way Valve	1
	18-372-01	Handle	1
21	16-972	90° Elbow	1
22	16-935	Quick Coupler Cap	1
	15-986	Cam Lock Adapter	1
23	18-389	4" Nipple	1
24	15-778	#50 Blank Gauge Port	1
25	15-740	#50 Series Clamp	9
26	15-738	Flanged Ball Valve	2
27	15-748	Reducer Coupling	2
28	14-607	Strainer, QC 100 MEsh	3
29	15-553	¾" - 90° Hose Barb	3
	15-553-01	Clip	3
	15-553-02	O-ring	3
30	15-743	Manifold Valve	1
31	15-776	#50 Tee	1
32	20-817	Regulating Valve	1
33	15-976	#50-90° x 1¼ Hose Barb	2
34	8897	1¼" Discharge Hose	31"
	18-116	Hose Clamp	2
35	14-671	Elbow 90°	1
36	14-801	Agitator Line Strainer, 50 Mesh	1
	14-802	Replacement 50 Mesh Screen	
	14-803	Decal, Clean Agitation Strainer	1
37	15-825	#50 Male Quick Coupler	1
38	15-735	#50 x 1 Female Pipe Thread Fitting	1
39	15-737	Flanged Strainer	1
	16-968-03	Screen (50 mesh)	1
40	15-777	Gauge Port Flange	1
41	30-579	Valve Mount	2
	HB-516-18-100	Hex Bolt, 5/16 - 18 x 1	4
	HNFL-516-18	Flange Whiz-loc Nut 5/16 - 18	4
42	15-775	Reducer Tee	1
43	8897	1¼" Discharge Hose	24"
	18-116	Hose Clamp	2
44	15-779	Hose Barb, 1 mPT x 1¼ HB	1

1302 SYSTEM WIRING [RADION® 8140]

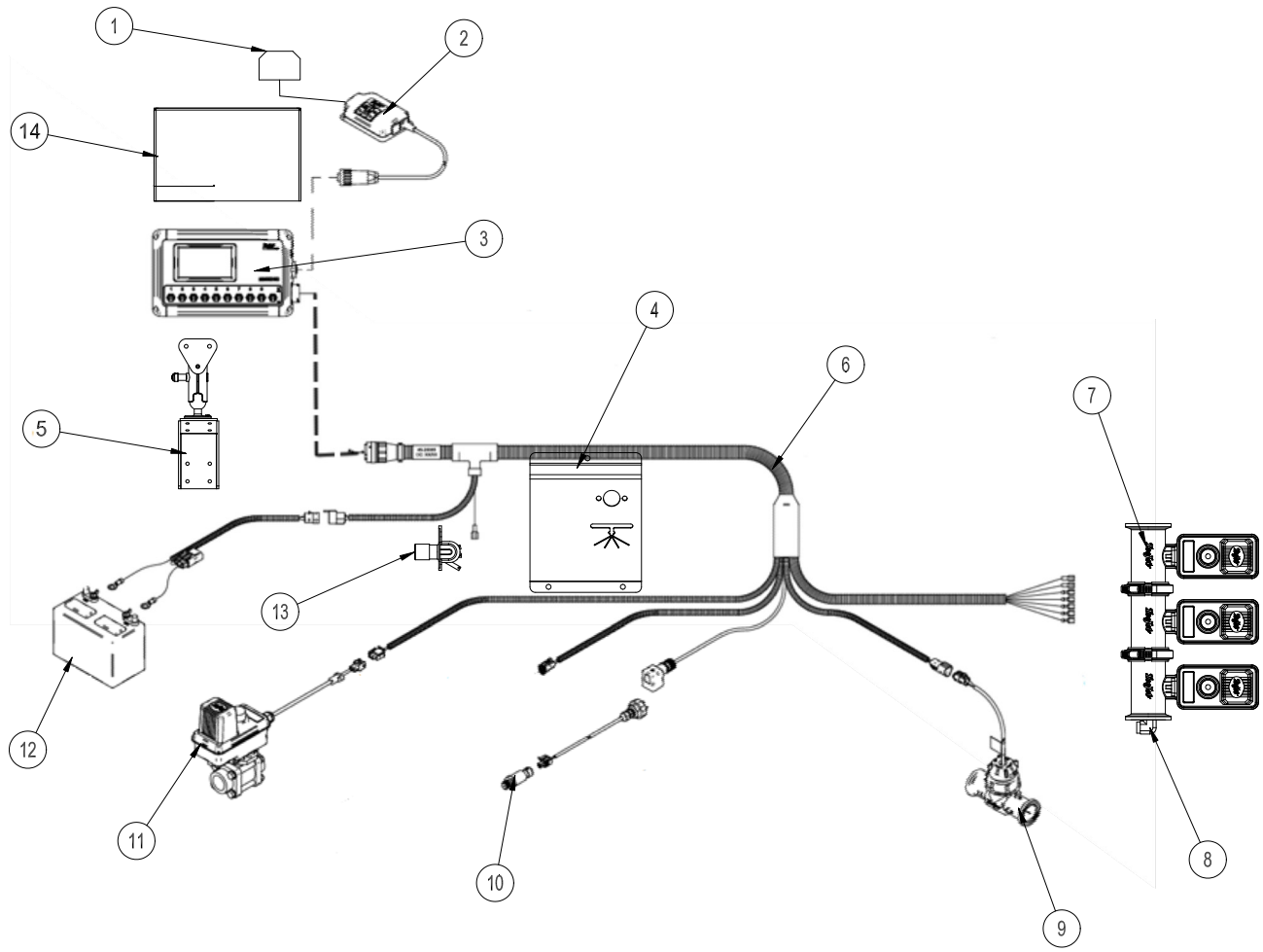

⚠ IMPORTANT If using Simulated Speed with a Radion 8140, one needs to change back to Ground Speed for proper rate control when spraying.

REF#	PART#	DESCRIPTION	QUANTITY
1*		Antenna	1
2*	20-687-02	GPS Speed Sensor	1
3*	20-697-01	Radion 8140 Console	1
4	10-705	Foot Plate	1
5	10-721	Mount Bracket	1
6*		Wire Harness	1
7	15-743	Manifold Valve	1
8	18-007	Elbow	1
9	20-684	Flow Meter	1
10*	20-670-04	Pressure Sensor	1
11	20-785	Regulator Valve	1
12	33-216	Battery	1
13	33-509	Master Boom Control	1
14	20-781	Plastic Radion Cover	1
*	20-697	TeeJet® Radion Kit (includes * items)	1
NS	33-508	Auto Blade Fuse 15AMP	1
NS	33-562	Auto Blade Fuse 40AMP	1

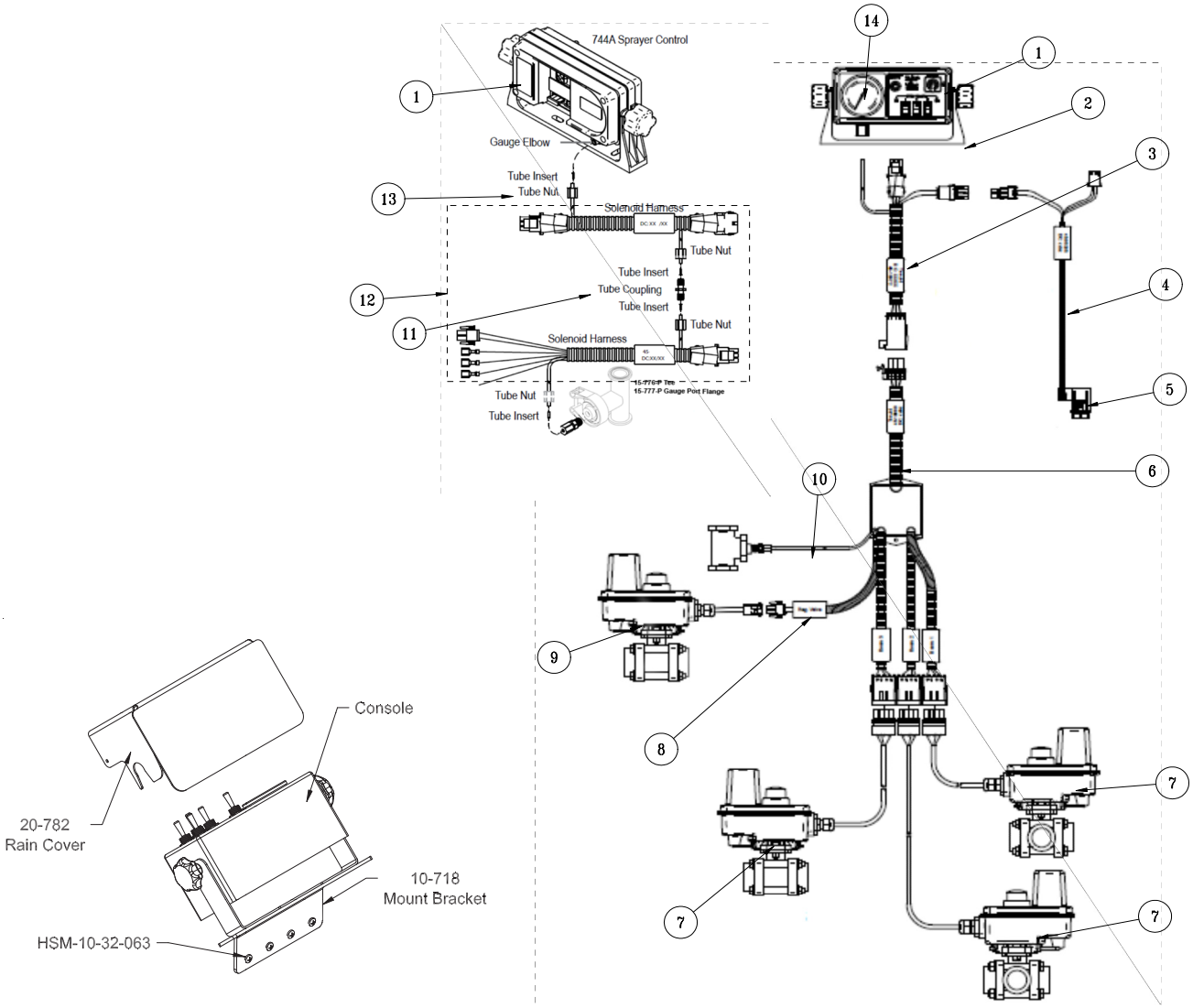

REF#	PART#	DESCRIPTION	QUANTITY
1*	20-688-02	744A Console	1
	20-688-01	200PSI Gauge	1
	20-688-07	Circuit Board	1
	20-688-08	Gauge Elbow	1
2	32-524	Mount Bracket	1
3*		Console harness	1
4*		Fused Power Cable	1
5	33-271	Fuse Block	1
6*		Ball Valve Wire Harness	1
7	15-743	Manifold Ball Valve	1
8*		Regulator Valve Adapter	1
9	20-817	Regulating Valve	1
10*	20-688-04	Tubing	1
11*	20-688-05	Tube Coupling	1
12*		Tube Nut Kit	1
13*	20-688-06	Tube Nut	1
14*	20-688-01	PSI Liquid Gauge	1
*	20-688	744A Kit Complete (includes * items)	
	20-688-07	Circuit Board	
	15-314	Replacement Master Switch	

STAR COMMAND I PLUMBING DRAWING

15-817 #50 Fitting O-ring
15-818 #75 Fitting O-ring

Boom	Left Hose	Center Hose	Right Hose
18'	9032-116	9032-86	9032-128
20'	9032-126	9032-86	9032-138
24'	9032-146	9032-86	9032-158

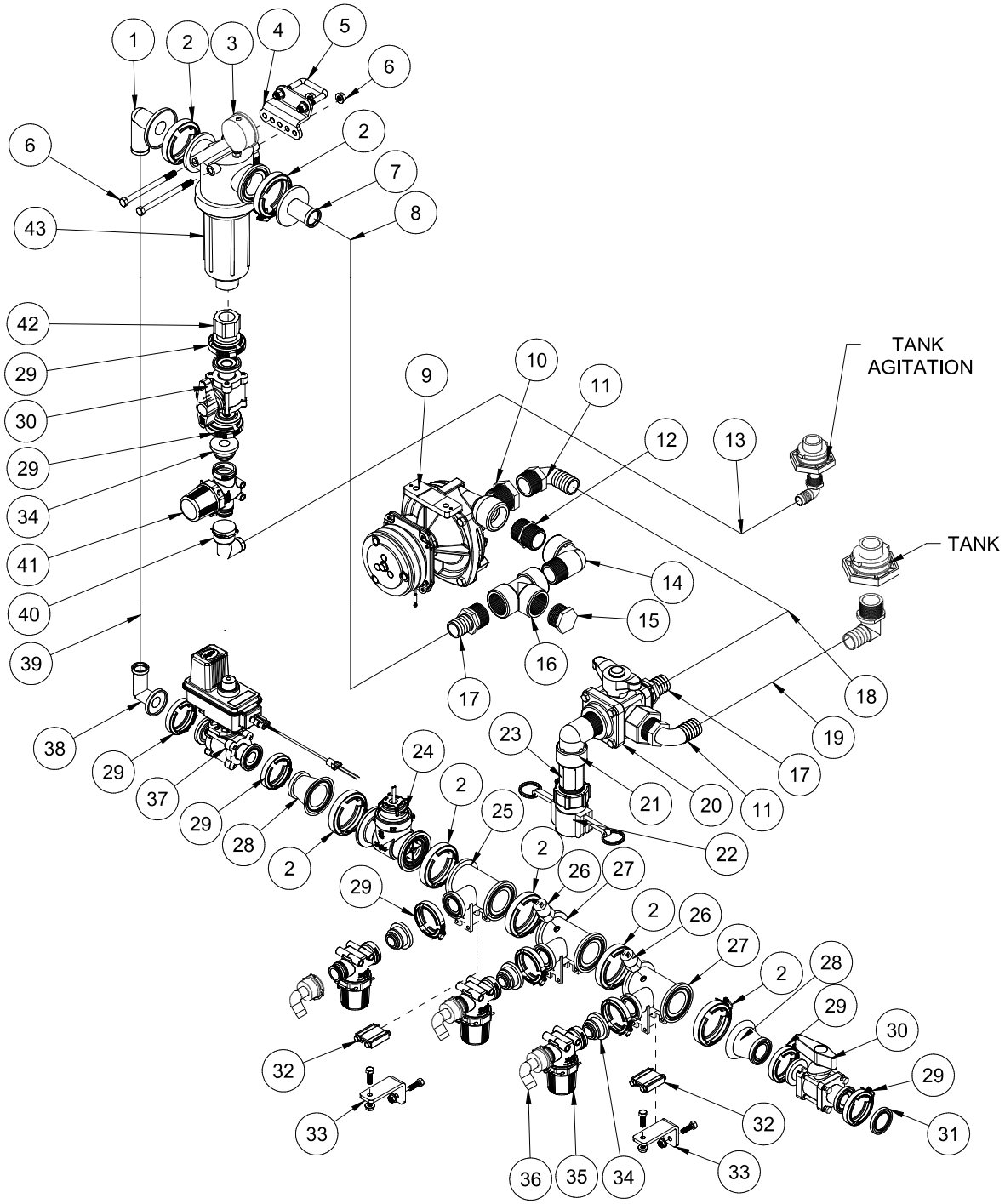

STAR COMMAND I PLUMBING PARTS LIST

REF#	PART#	DESCRIPTION	QUANTITY
1	15-739	#75 x 90° x 1 1/4 Hose Barb	1
2	15-741	#75 Series Clamp	7
3	16-281	Liquid Filled Gauge	1
4	30-551	Filter Mount	1
5	17-537	Square U-bolt	1
6	HB-38-16-500	Hex Bolt, 3/8 - 16 x 5	2
	HNFL-38-16	Flange Whiz-loc Nut, 3/8 - 16	2
7	15-744	#75 x 1¼ Hose Barb	1
8	8897	1 1/4" Discharge Hose	41"
	18-116	Hose Clamp	2
9	15-984	Hypro Spray Pump	1
10	16-973	Hex Bushing	1
11	16-156	Elbow	2
12	16-880	Nipple	1
13	8896	1" Discharge Hose	65"
	18-116	Hose Clamp	2
14	16-972	90° Elbow	1
15	10-389	Plug	1
16	10-390	Tee	1
17	16-161	Fitting	2
18	8897	1 1/4" Discharge Hose	28"
	18-116	Hose Clamp	2
19	8897	1 1/4" Discharge Hose	18"
	18-116	Hose Clamp	2
20	18-372	3-Way Valve	1
	18-372-01	Handle	1
21	16-972	90° Elbow	1
22	16-935	Quick Coupler Cap	1
	15-986	Cam Lock Adapter	1
23	18-389	4" Nipple	1
24	20-684	#802 Flow Meter	1
25	15-775	Reducer Tee	1
26	20-670-04	Pressure Sensor	2
27	30-164	Tapped Reducer Tee	2
28	15-748	Reducer Coupling	2
29	15-740	#50 Series Clamp	9
30	15-738	Flanged Ball Valve	2
31	15-778	#50 Blank Gauge Port	1
32	15-743-03	Aluminum Mounting Rail	2
	15-743-06	SS Screw	8
33	30-579	Valve Mount	2
	HB-516-18-100	Hex Bolt, 5/16 - 18 x 1	4
	HNFL-516-18	Flange Whiz-loc Nut 5/16 - 18	4
34	15-825	#50 Male Quick Coupler	4
35	14-607	Strainer, QC 100 MEsh	3
36	15-553	3/4" - 90° Hose Barb	3
	15-553-01	Clip	3
	15-553-02	O-ring	3
37	20-785	Regulating Valve	1
38	15-976	#50-90° x 1¼ Hose Barb	1
39	8897	1 1/4" Discharge Hose	31"
	18-116	Hose Clamp	2
40	14-671	Elbow 90°	1
41	14-801	Agitator Line Strainer, 50 Mesh	1
	14-802	Replacement 50 Mesh Screen	
	14-803	Decal, Clean Agitation Strainer	1
42	15-735	#50 x 1 Female Pipe Thread Fitting	1
43	14-628	Flanged Strainer	1
	16-968-05	Screen (80 mesh)	1

1306/1307/1308 MODULE MOUNTS

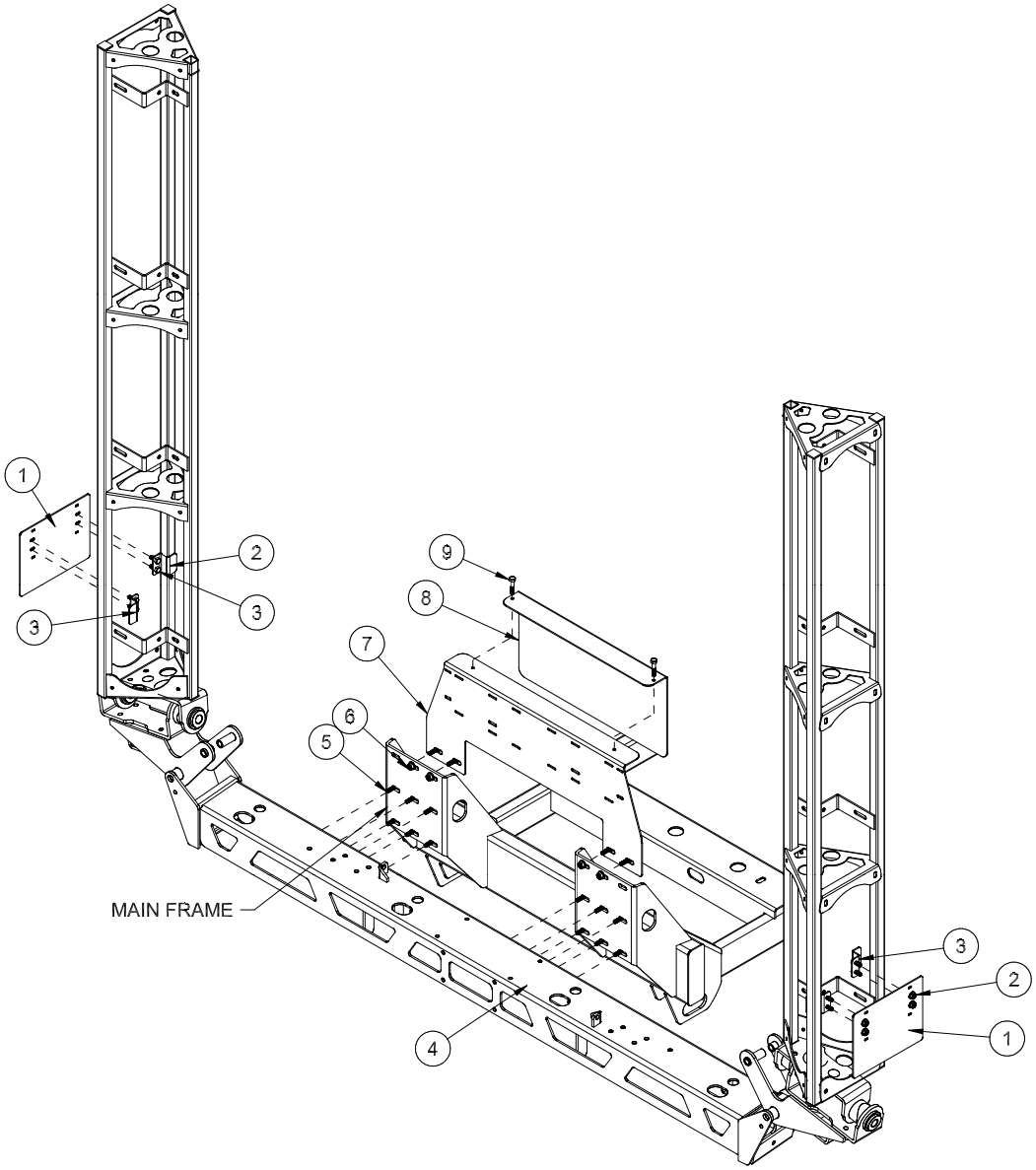

REF#	PART#	DESCRIPTION	QUANTITY
1	20-665	Drive Module Bracket	2
2	20-664	Z Bracket	4
3	HSTP-14-20-075	Machine Screw, 1/4 - 20 x 3/4	10
	HNFL-14-20	Flange Whiz Lock Nut, 1/4 - 2	10
4		Center Boom Mount	1
5	HB-38-16-125	Bolt, ⅜ - 16 x 1¼	12
	HW-38	Flat Washer, ⅜	12
	HW-5/16	Flat Washer, 5/16	12
	HNFL-516-18	Flange Whiz Lock Nut, ⅜-16	12
6	HB-38-16-125	Bolt, ⅜ - 16 x 1¼	4
	HW-3/8	Flat Washer. ⅜	4
	HNFL-516-18	Flange Whiz Lock Nut, ⅜-16	4
7	30-577	Module Mount Bracket	1
8	20-920	Module Cover Bracket	1
9	HB-516-18-150	Hex Bolt, 5/16 -18 x 1 1/2	2
	HNFL-516-18	Flange Whiz-loc Nut, 5/16 -18	2

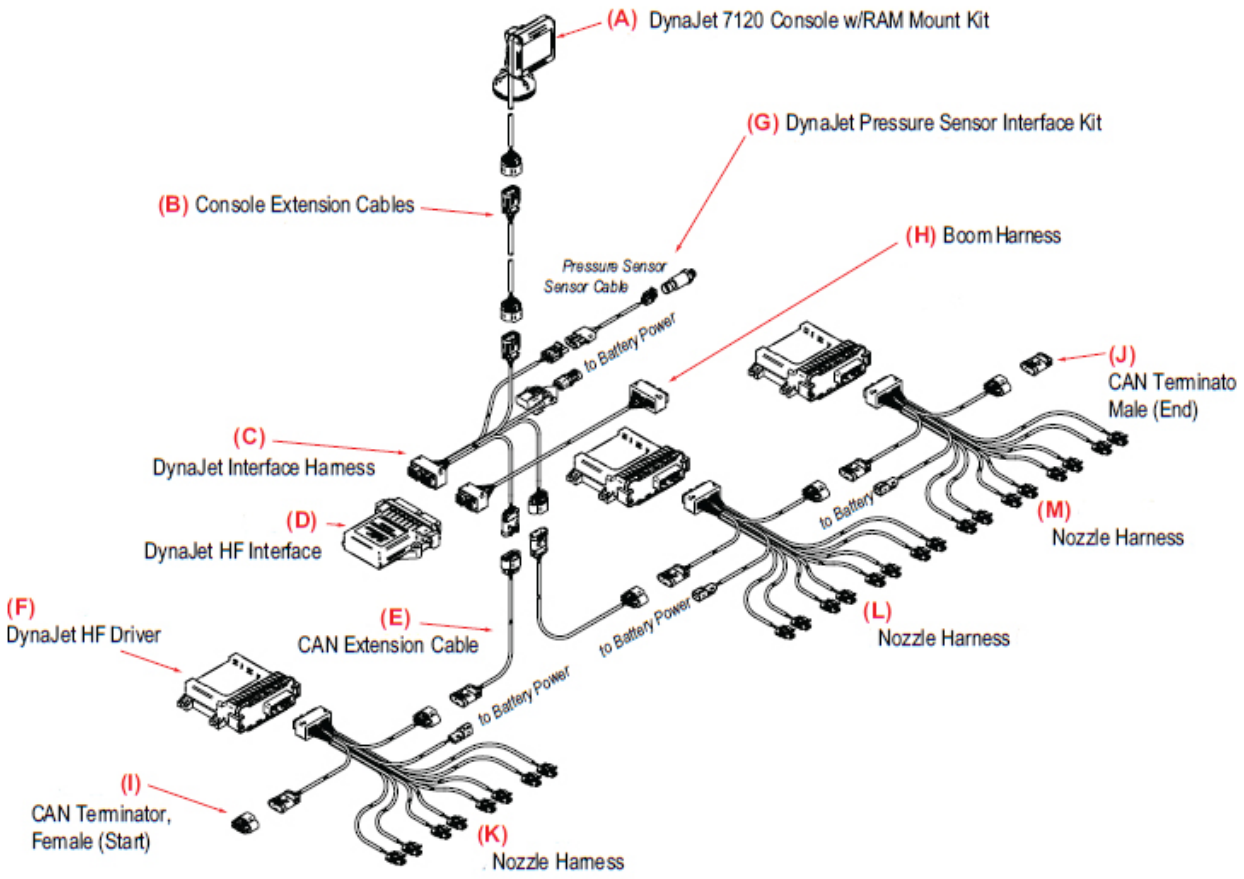

REF#	PART#	DESCRIPTION	QUANTITY
A	20-670-06	DynaJet 7120 Console	1
B		Console Extension Cable	1
C		DynaJet Interface Harness	1
D	20-670-07	DynaJet HF Interface	1
E		CAN Extension Cables	1
F	20-670-05	DynaJet HF Driver	3
G	20-670-04	Pressure Sensor	1
		Pressure Sensor Cable	1
H		Boom Harness	1
I	20-670-09	Terminator, Female (Start)	1
J	20-670-08	Terminator, Male (End)	1
K	20-670-01	Left Nozzle Harness	1
L	20-670-02	Center Nozzle Harness	1
M	20-670-03	Right Nozzle HArness	1

NOTE: This is for 20" spacing used with the Radion system.

STAR COMMAND II PLUMBING DRAWING

15-817 #50 Fitting O-ring
15-818 #75 Fitting O-ring

Boom	Left Hose	Center Hose	Right Hose
18'	9032-116	9032-86	9032-128
20'	9032-126	9032-86	9032-138
24'	9032-146	9032-86	9032-158

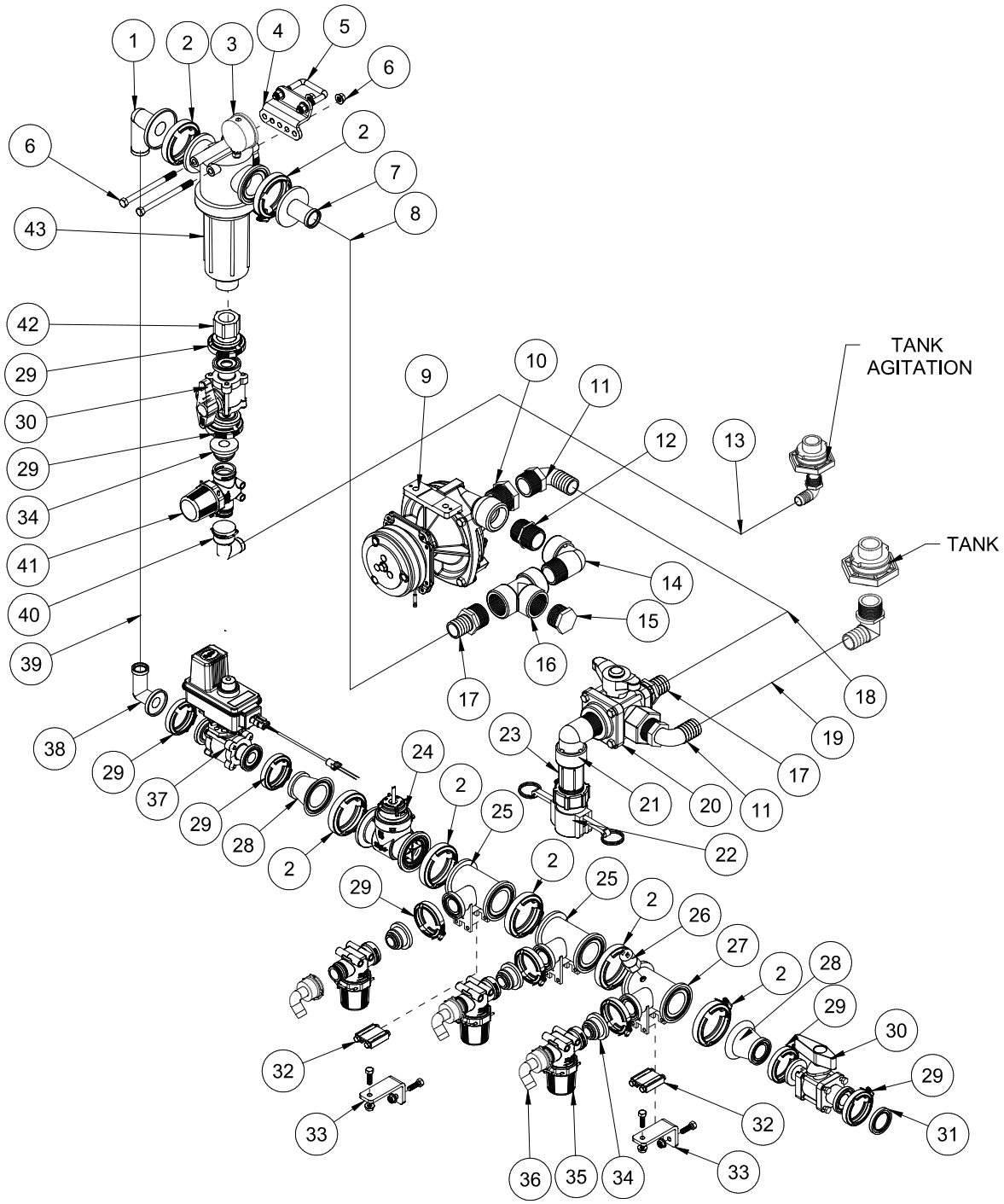

STAR COMMAND II PLUMBING PARTS LIST

REF#	PART#	DESCRIPTION	QUANTITY
1	15-739	#75 x 90° x 1¼ Hose Barb	1
2	15-741	#75 Series Clamp	7
3	16-281	Liquid Filled Gauge	1
4	30-551	Filter Mount	1
5	17-537	Square U-bolt	1
6	HB-38-16-500	Hex Bolt, ⅜ - 16 x 5	2
	HNFL-38-16	Flange Whiz-loc Nut, ⅜ - 16	2
7	15-744	#75 x 1¼ Hose Barb	1
8	8897	1¼" Discharge Hose	41"
	18-116	Hose Clamp	2
9	15-984	Hypro Spray Pump	1
10	16-973	Hex Bushing	1
11	16-156	Elbow	2
12	16-880	Nipple	1
13	8896	1" Discharge Hose	65"
	18-116	Hose Clamp	2
14	16-972	90° Elbow	1
15	10-389	Plug	1
16	10-390	Tee	1
17	16-161	Fitting	2
18	8897	1¼" Discharge Hose	28"
	18-116	Hose Clamp	2
19	8897	1¼" Discharge Hose	18"
	18-116	Hose Clamp	2
20	18-372	3-Way Valve	1
	18-372-01	Handle	1
21	16-972	90° Elbow	1
22	16-935	Quick Coupler Cap	1
	15-986	Cam Lock Adapter	1
23	18-389	4" Nipple	1
24	20-684	#802 Flow Meter	1
25	15-775	Reducer Tee	2
26	20-670-04	Pressure Sensor	1
27	30-164	Tapped Reducer Tee	1
28	15-748	Reducer Coupling	2
29	15-740	#50 Series Clamp	9
30	15-738	Flanged Ball Valve	2
31	15-778	#50 Blank Gauge Port	1
32	15-743-03	Aluminum Mounting Rail	2
	15-743-06	SS Screw	8
33	30-579	Valve Mount	2
	HB-516-18-100	Hex Bolt, 5⁄16 - 18 x 1	4
	HNFL-516-18	Flange Whiz-loc Nut 5⁄16 - 18	4
34	15-825	#50 Male Quick Coupler	4
35	14-607	Strainer, QC 100 MEsh	3
36	15-553	¾" - 90° Hose Barb	3
	15-553-01	Clip	3
	15-553-02	O-ring	3
37	20-785	Regulating Valve	1
38	15-976	#50-90° x 1¼ Hose Barb	1
39	8897	1¼" Discharge Hose	31"
	18-116	Hose Clamp	2
40	14-671	Elbow 90°	1
41	14-801	Agitator Line Strainer, 50 Mesh	1
	14-802	Replacement 50 Mesh Screen	
	14-803	Decal, Clean Agitation Strainer	1
42	15-735	#50 x 1 Female Pipe Thread Fitting	1
43	14-628	Flanged Strainer	1

1318/1320/1324 MODULE MOUNTS

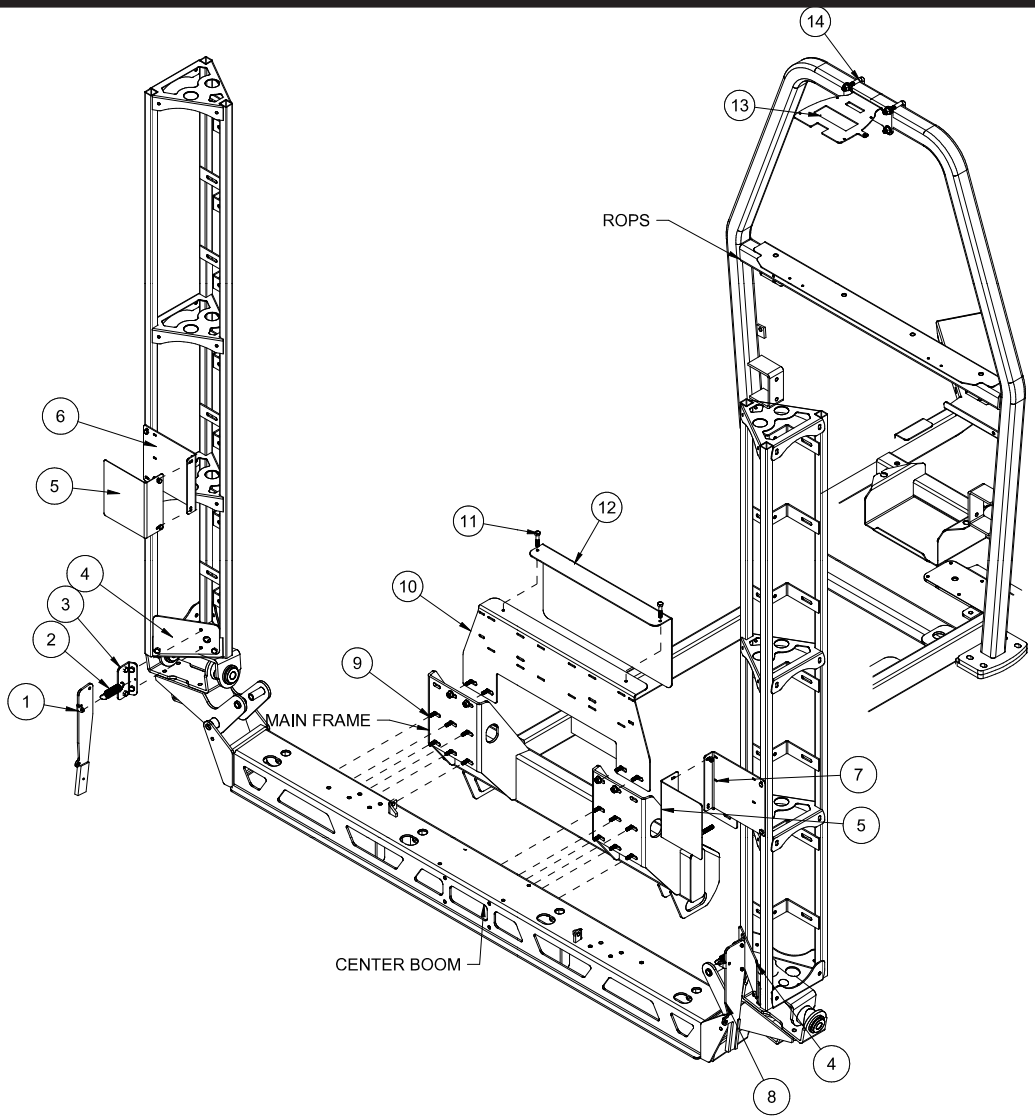

REF#	PART#	DESCRIPTION	QUANTITY
1	17-562	LH Break-Away Arm	1
	8946-3.5	Plastic Wear Strip	2
	HRS-316-050	Rivet, 3/16 x 1/2	2
2	11-050	Spring	2
3	17-560	Hinge Mount	2
4	17-559	Break-Away Mount	2
5	20-796	Bracket Cover	2
6	20-795	LH Driver Module Bracket	1
7	20-793	RH Driver Module Bracket	1
8	17-561	RH Break-Away Arm	1
9	HB-38-16-125	Hex Bolt,	16
	HW-38	Flat Washer, 3/8	16
	HNFL-38-16	Flange Whiz-loc Nut,	16
10	30-577	Module Mount Bracket	1
11	HB-516-18-150	Hex Bolt, 5/16-18 x 1 1/2	2
	HNFL-516-18	Flange Whiz-loc Nut, 5/16-18	2
12	20-920	Module Cover Bracket	1
13	20-840	Receiver Mount	1
14	17-537	U-Bolt	2

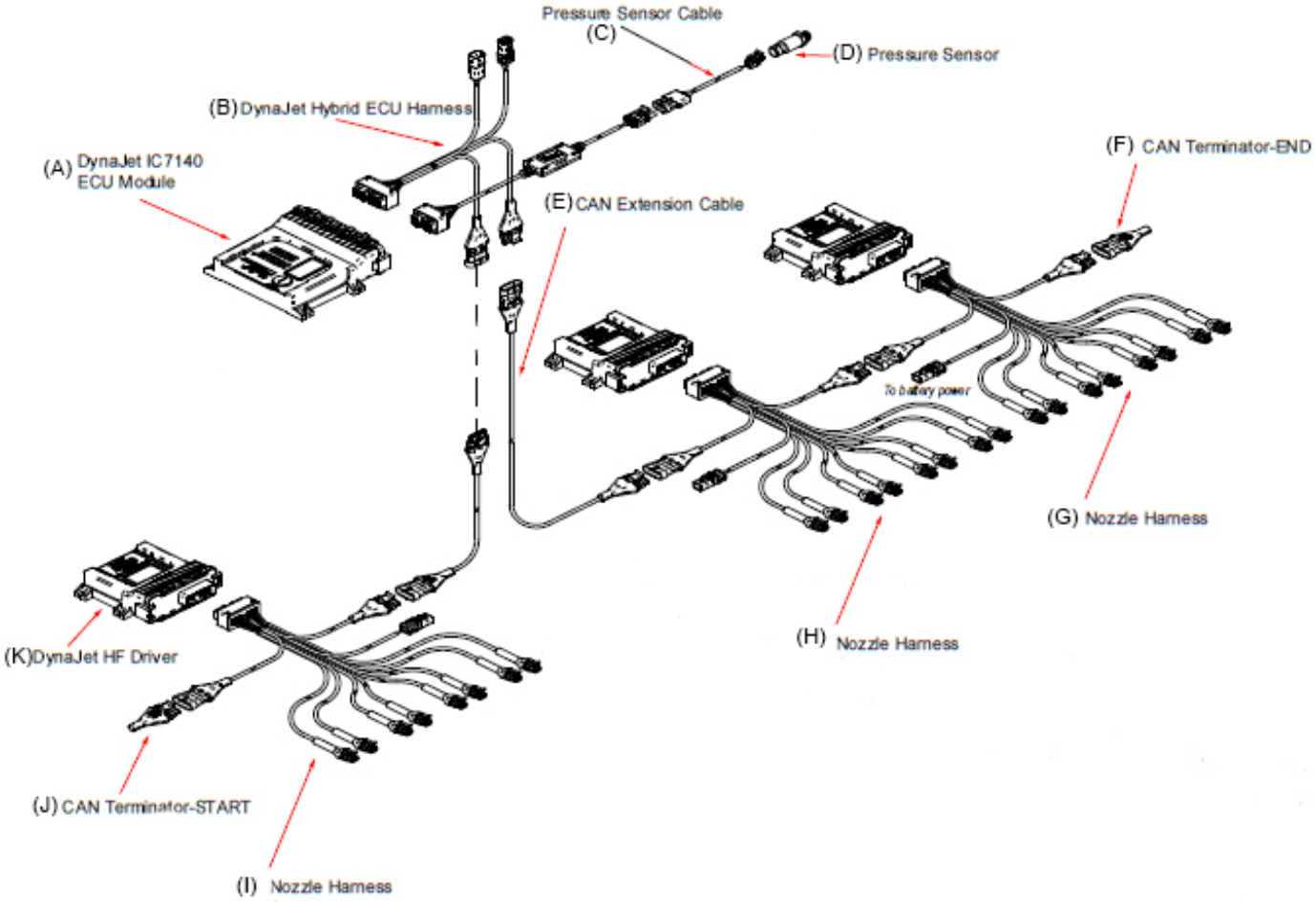

REF#	PART#	DESCRIPTION	QUANTITY
A		DynaJet IUC7140 Module	1
B		Harness, IC7140 to IC45	1
C		Cable, Pressure Sensor	1
D	20-670-04	Pressure Sensor	1
E		CAN Extension Cable	1
F	20-670-08	CAN Terminator End	1
G	20-806-03	Right Harness, DJ Driver	1
H	20-806-02	Center Harness, DJ Driver	1
I	20-806-01	Left Harness, DJ Driver	1
J	20-670-09	CAN Terminator Start	1
K	20-670-05	DynaJet Driver	3

MATRIX 908 WIRING FOR 1318/1320/1324

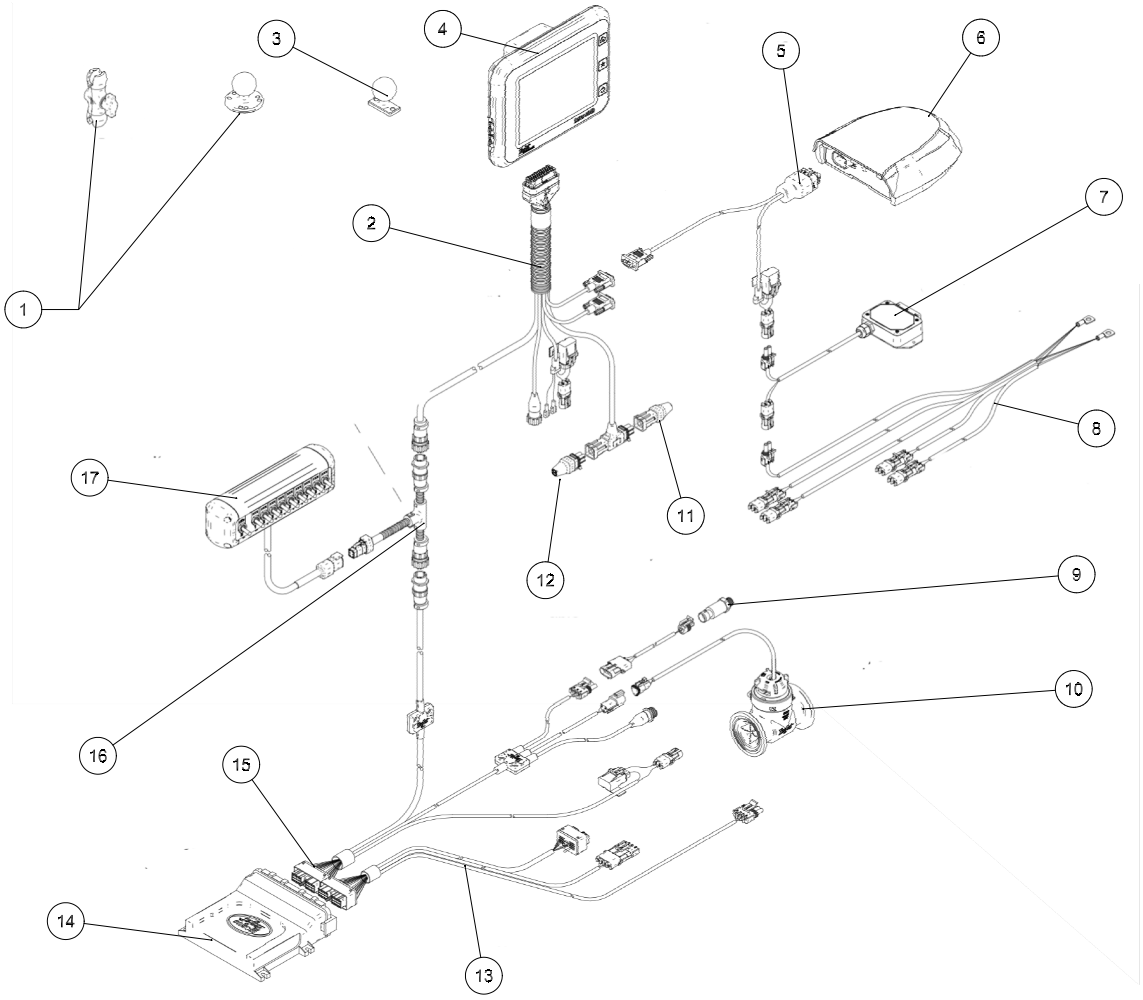

REF#	PART#	DESCRIPTION	QUANTITY
1		RAM Mount	1
2		MATRIX Harness	1
3		RAM Base	1
4		MATRIX 908 Console	1
5		Antenna Cable	1
6	20-855-01	RXA-52 GNSS Antenna	1
7	20-686-02	Switch Box	1
8		Power Cable	1
9	20-670-04	Pressure Sensor	1
10	20-684	Flow Meter	1
11		Terminator, Male	1
12		Terminator, Female	1
13		DynaJet Interface Boom Harness	1
14	20-917	IC45 Sprayer Module	1
15	20-918	IC45 Harness	1
16		TeeJet In-Cab Cable	1
17	20-919	Switch Box	1
NS	20-855	KIT, IC45 & MATRIX 908 WITH ISO UNLOCK	

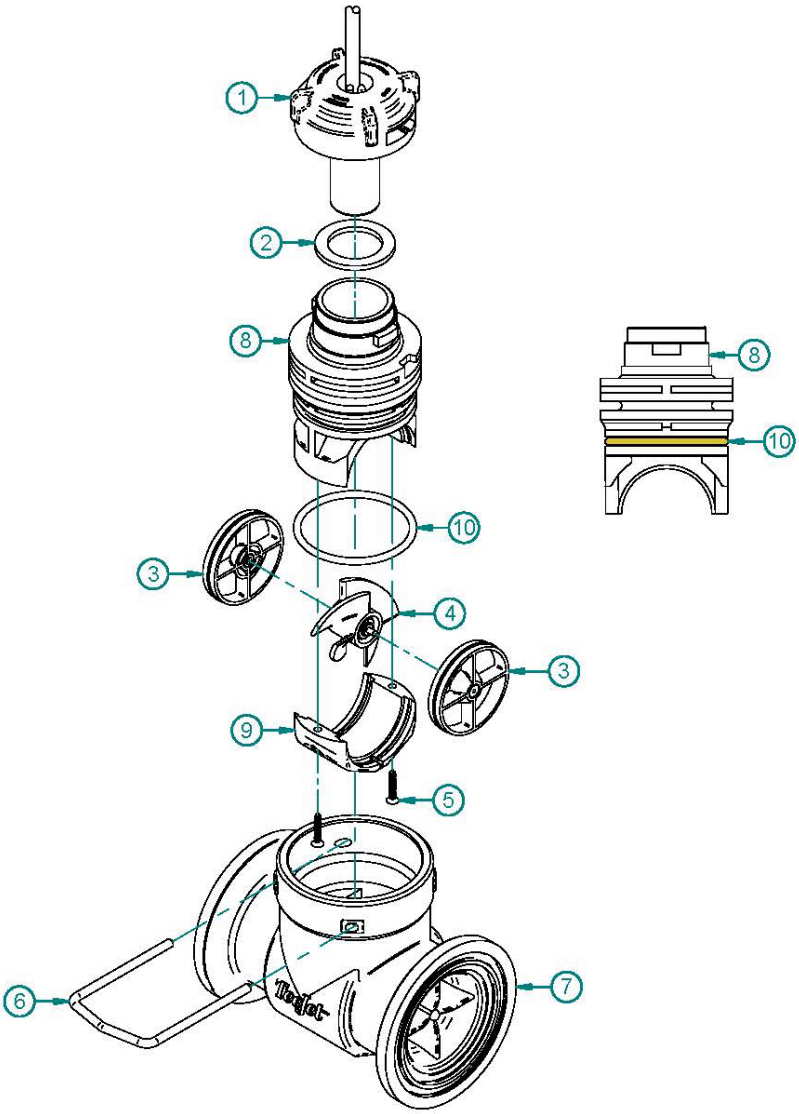

REF#	PART#	DESCRIPTION	QUANTITY
1	20-684-01	Sensor, PCB Assembly	1
2		Washer, Seal	1
3*		Guide Vane Bearing	2
4*		Turbine Assembly	1
5*		Flat HEad Screw, #6 - ⅝	2
6		Pin, Retaining	1
7	20-684-04	Body	1
8*		Insert, Body	1
9*		Endcap	1
10*	20-684-02	Oring	1
*	20-684-03	802 Flowmeter Repair Kit (includes all * items)	

CONTROL MOUNTS DRAWINGS

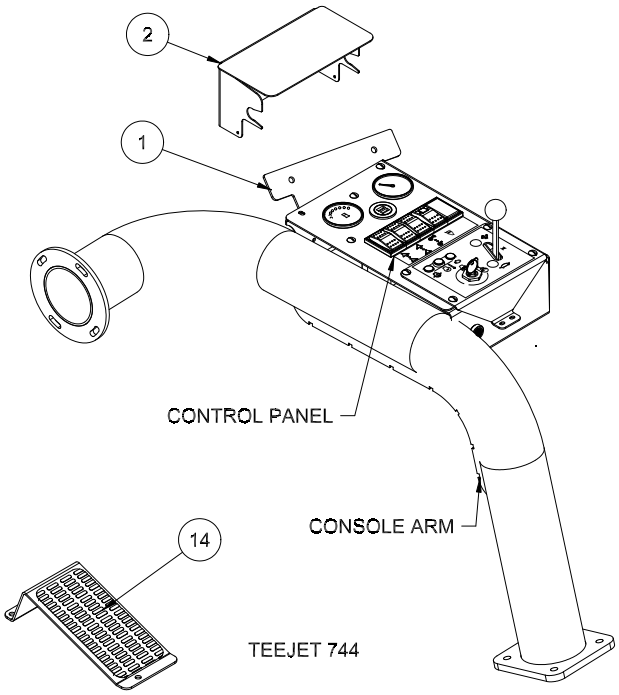

TEEJET 744

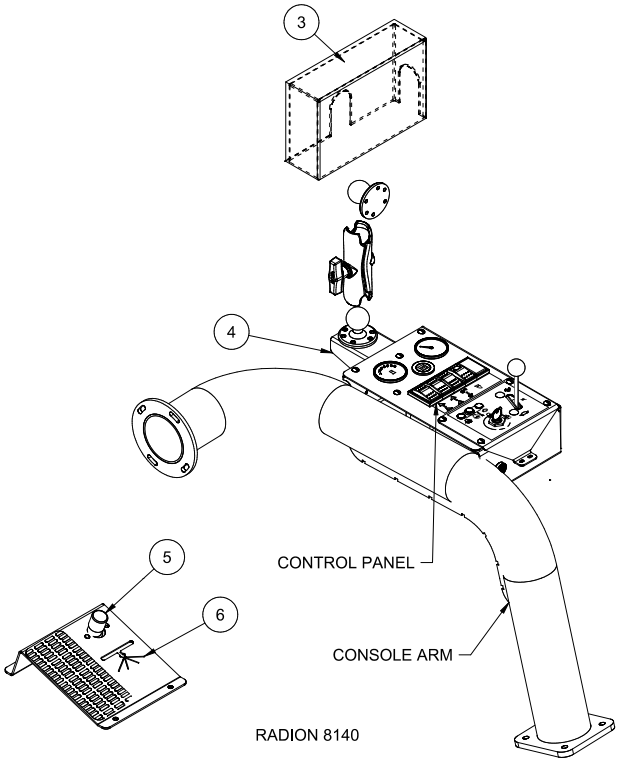

RADION 8140

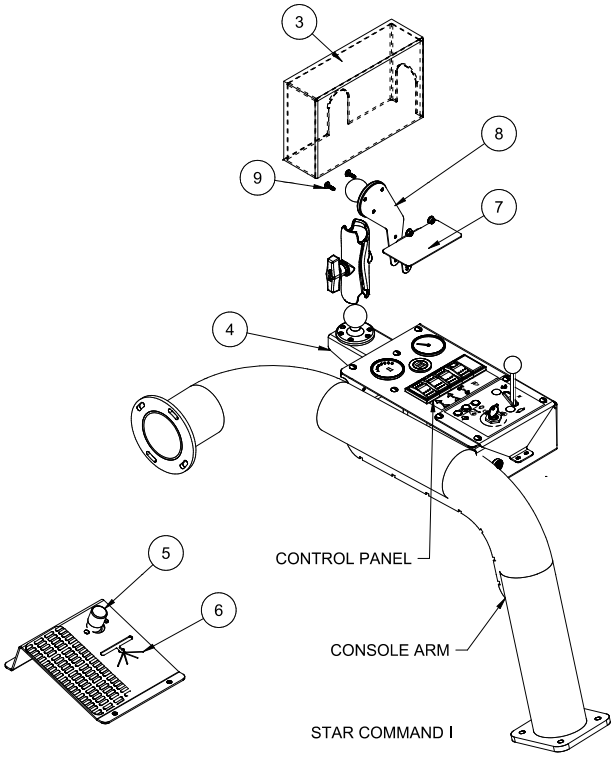

STAR COMMAND I

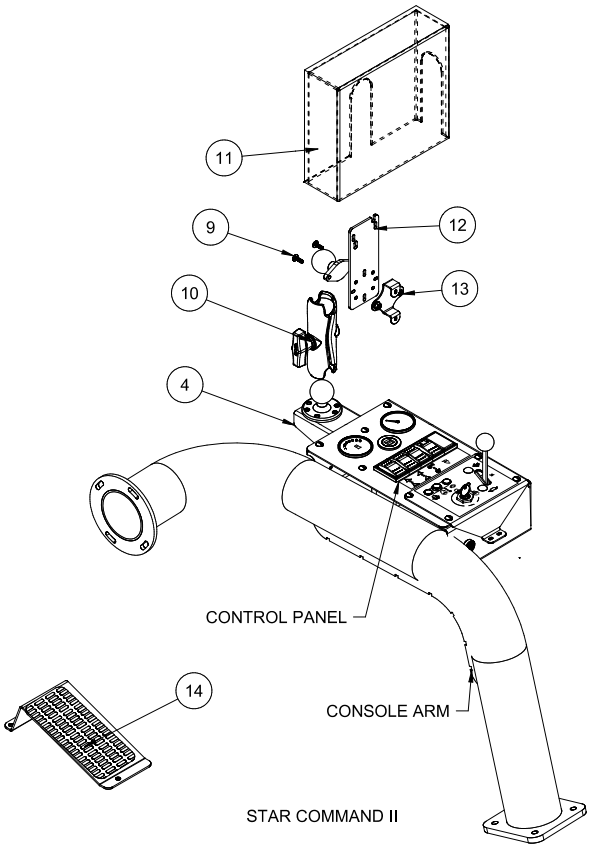

STAR COMMAND II

CONTROL MOUNTS PARTS LIST

REF#	PART#	DESCRIPTION	QUANTITY
1	10-718	744 Control Mount	1
2	20-782	Rain Cover	1
3	20-781	Cover for Radion Control	1
4	10-721	Short Ram Mount	1
5	33-509	Master Boom Switch	1
6	10-705	Switch Foot Plate	1
	45-132	Foot Grip	1
7	10-716	DynaJet Control Cover	1
8	10-719	Radion/DynaJet Control Mount	1
9	HSM-10-32-075	Machine Screw, 10-32 x $^{3}/_{4}$	8
10		MATRIX Ram Mountt	1
11	20-836	Star Command II Cover	1
12	32-726	MATRIX Switch Mount	1
13	20-856	MATRIX Controller Adapter	1
14	45-047	Foot Rest	1
	45-132	Foot Grip	1

20-817 REGULATOR VALVE

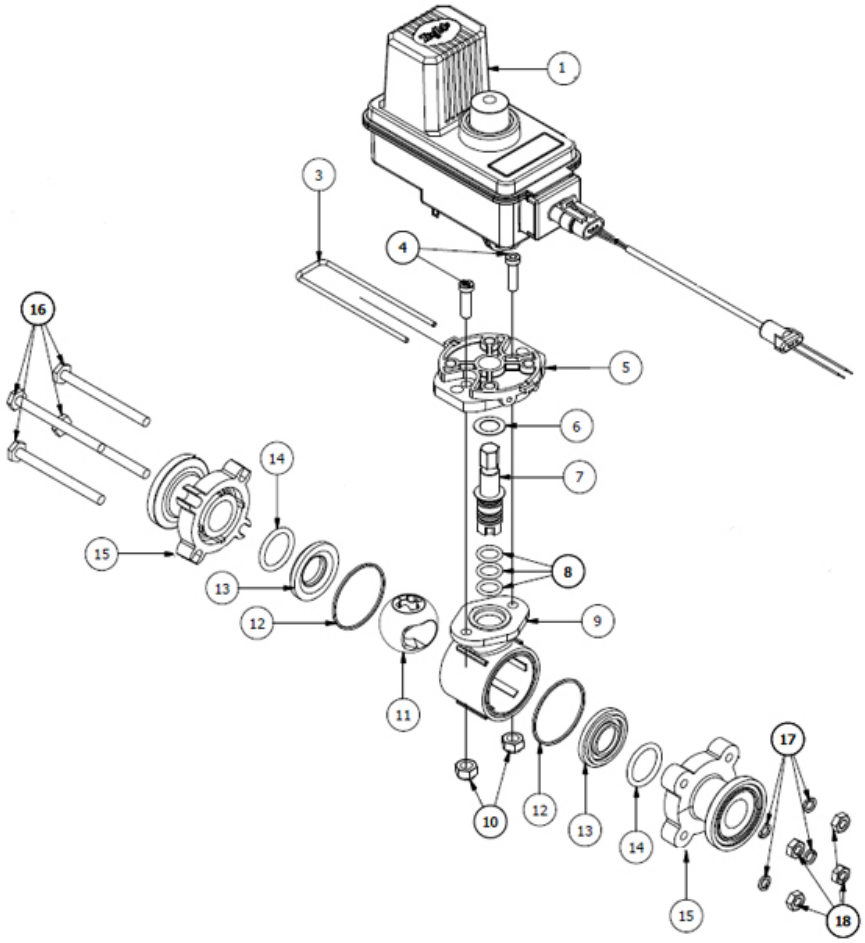

REF#	PART#	DESCRIPTION	QUANTITY
1	20-817-01	Motor	1
3	15-552-24	Retaining Clip	1
4		Socket Head Cap Screw, Stainless Steel	2
5	15-552-26	Motor Adapter, Polypropylene	1
6*	15-517-11	Thrust Washer, Teflon	1
7	15-552-27	Stem, Stainless Steel	1
8	15-552-05	O-ring, Viton	3
9	15-517-16	Body, Nylon	1
10		Nylon Lock Nut, Stainless Steel	2
11		Ball, Polypropylene	1
12*	15-552-13	Gasket, Viton	2
13*	15-517-19	Seal, Teflon	2
14*	15-517-20	O-ring, Viton	2
15	15-743-01	End Cap	1
16		SS Hex Bolt, 1/4 - 20 x 3	4
17		SS Lock Washer, 1/4	4
18	15-517-23	SS Nut, 1/4 - 20	4
*	15-552-10	Spare Parts Kit	
	20-817	Complete Regulator Valve	

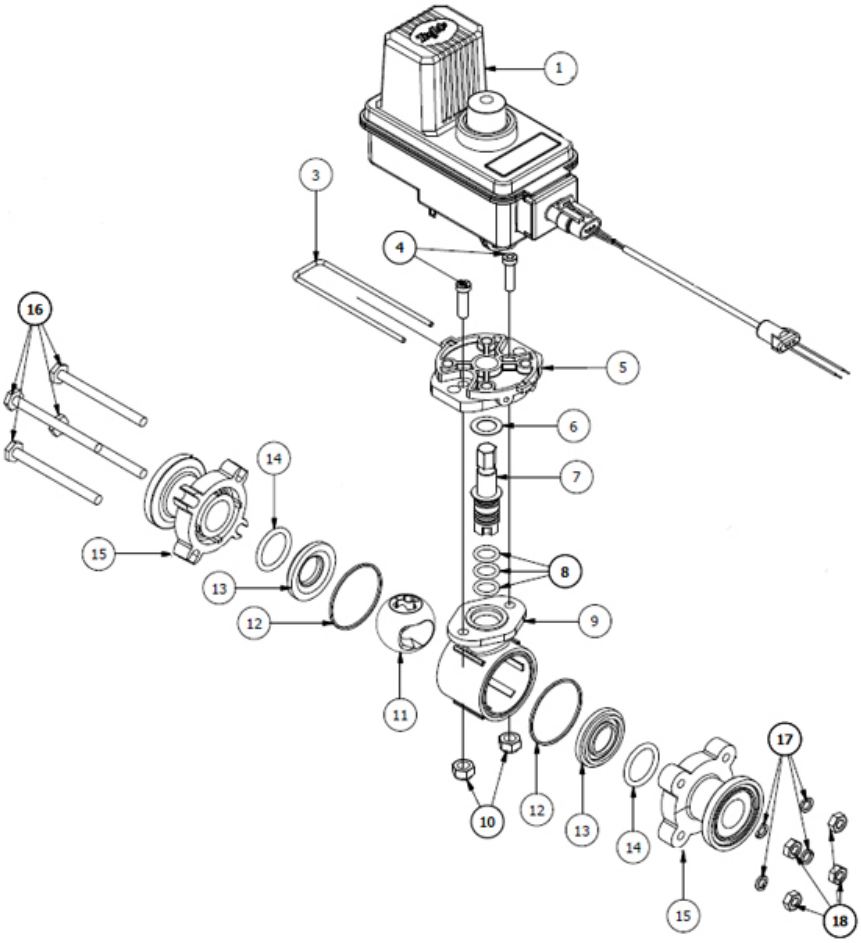

REF#	PART#	DESCRIPTION	QUANTITY
1	20-785-01	Motor, 6RPM	
3	15-552-24	Retaining Clip	1
4	15-552-25	Socket Head Cap Screw, Stainless Steel	2
5	15-552-26	Motor Adapter, Polypropylene	1
6*	15-517-11	Thrust Washer, Teflon	1
7	15-552-27	Stem, Stainless Steel	1
8	15-552-05	O-ring, Viton	3
9	15-517-16	Body, Nylon	1
10		Lock Nut, Stainless Steel	2
11		Ball, Polypropylene	1
12*	15-552-13	Gasket, Viton	2
13*	15-517-19	Seal, Teflon	2
14*	15-517-20	O-ring, Viton	2
15	15-743-01	End Cap	1
16		SS Hex Bolt, $^1/_4$ - 20 x 3	4
17		SS Lock Washer, $^1/_4$	4
18	15-517-23	SS Nut, $^1/_4$ - 20	4
*	15-552-10	Spare Parts Kit	
	20-785	Complete Regulator Valve	

15-743 MANIFOLD BALL VALVE

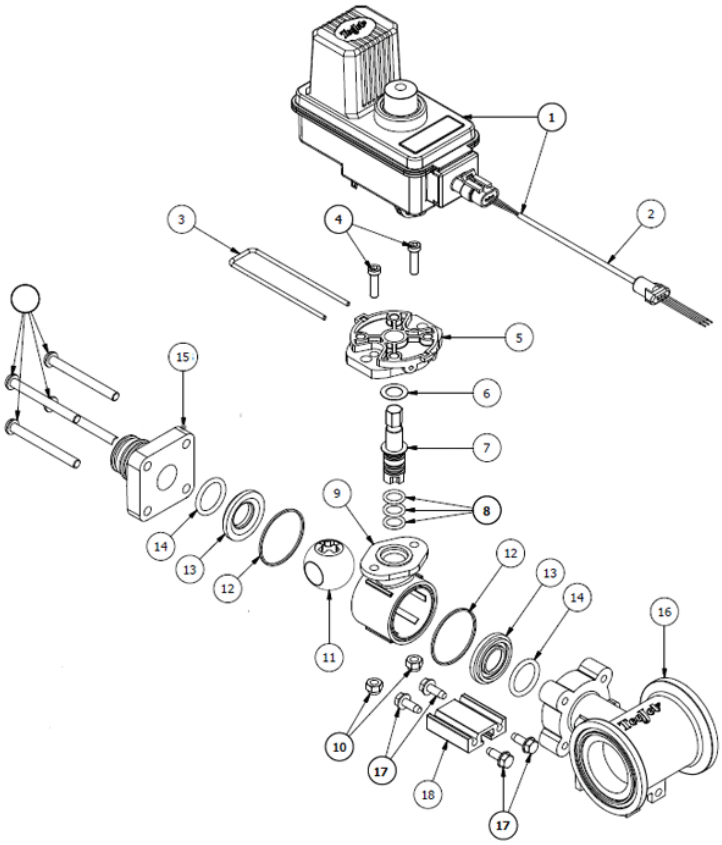

REF#	PART#	DESCRIPTION	QUANTITY
1	15-552-23	Motor	
2	15-878	Metri-Pack Cable (comes with motor)	1
3	15-552-24	Retaining Clip	1
4	15-552-25	Socket Head Cap Screw, Stainless Steel	2
5	15-552-26	Motor Adapter, Polypropylene	1
6*	15-517-11	Thrust Washer, Teflon	1
7	15-552-27	Stem, Stainless Steel	1
8*	15-552-05	O-ring, Viton	3
9	15-517-16	Body, Nylon	1
10		Lock Nut, Stainless Steel	2
11	15-743-04	Ball, Polypropylene	1
12*	15-552-13	Gasket, Viton	2
13*	15-517-19	Seal, Teflon	2
14*	15-517-20	O-ring, Viton	2
15	15-743-01	End Cap	1
16	15-743-02	#75 Tee Body	1
17	15-743-06	Screw, SS	4
18	15-743-03	Mounting Rail Aluminum	1
*	15-552-10	Spare Parts Kit (includes all * items)	
	15-743-05	Single Valve (shown)	

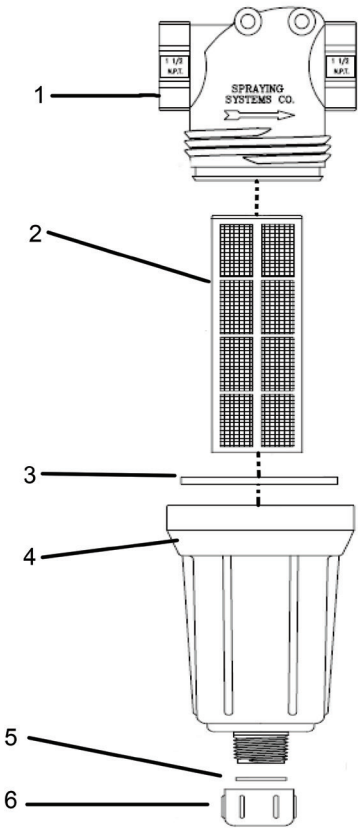

REF#	PART#	DESCRIPTION	QUANTITY
1	15-737-01	Strainer Head 75 Series	1
2*	16-968-03	50 Mesh Strainer	1
**	16-968-05	80 Mesh Strainer	1
3	14-521-02	EPDM Gasket	1
4	14-521-03	Bowl 1" NPT	1
5	14-521-04	EPDM Rubber gasket	1
6	14-521-05	Cap	1

*	15-737	Flanged Strainer Assembly with 50 Mesh Screen
**	14-628	Flanged Strainer Assembly with 80 Mesh Screen

14-801 FLANGED STRAINER ASSEMBLY WITH 80 MESH

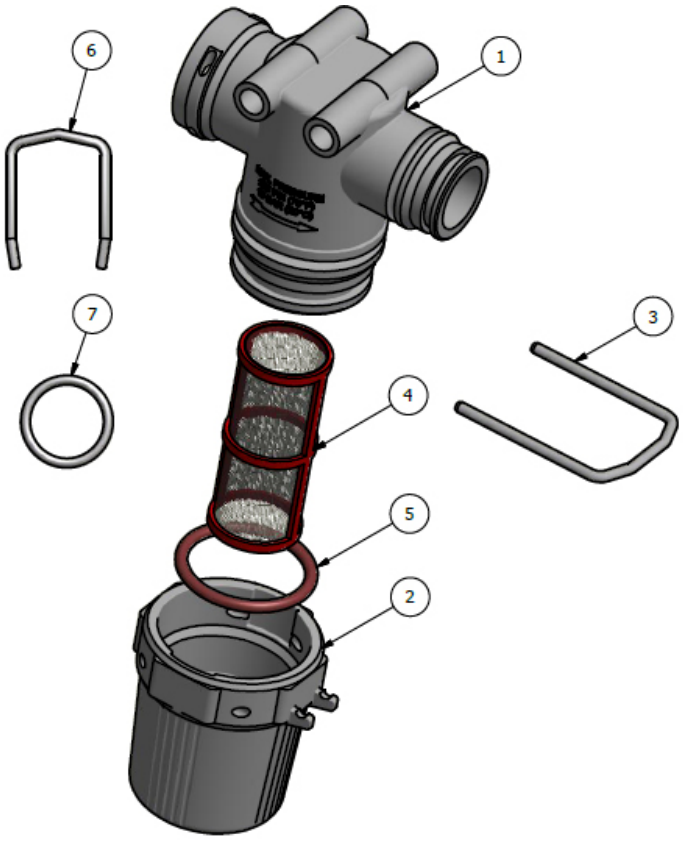

REF#	PART#	DESCRIPTION	QUANTITY
1		QC Strainer Head	1
2	14-801-01	Bowl	1
3		Strainer QC Retaining Clip	1
4	14-802	50 Mesh Strainer	1
5	14-801-02	Viton O-ring	1
6	15-553-01	Retaining Clip	1
7	15-553-02	Viton O-ring	1

14-607 QC STRAINER ASSEMBLY WITH 100 MESH

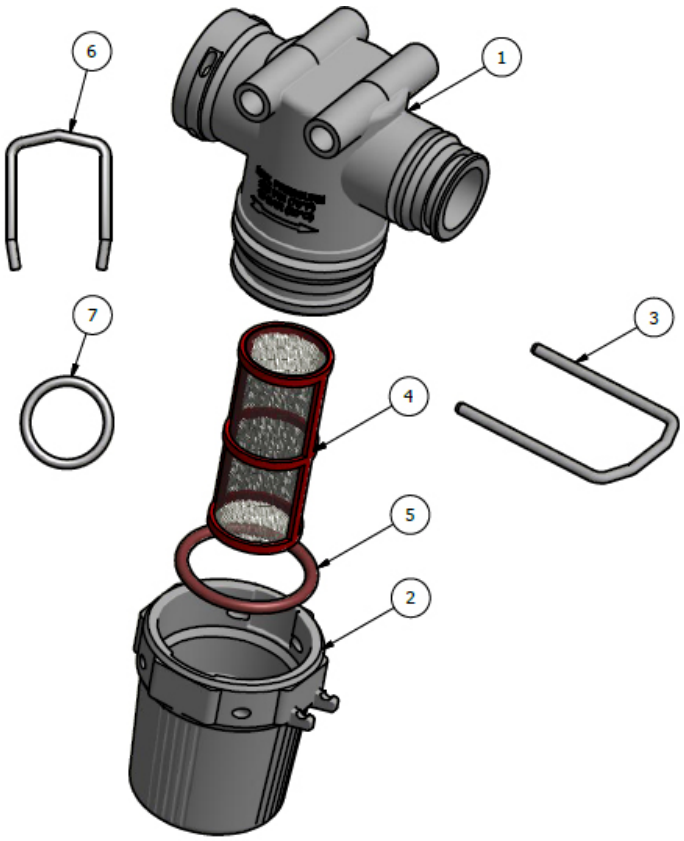

REF#	PART#	DESCRIPTION	QUANTITY
1		QC Strainer Head	1
2	14-801-01	Bowl	1
3		Strainer QC Retaining Clip	1
4	14-609	100 Mesh Strainer	1
5	14-801-02	Viton O-ring	1
6	15-553-01	Retaining Clip	1
7	15-553-02	Viton O-ring	1

32-520 20' BOOM DRAWING

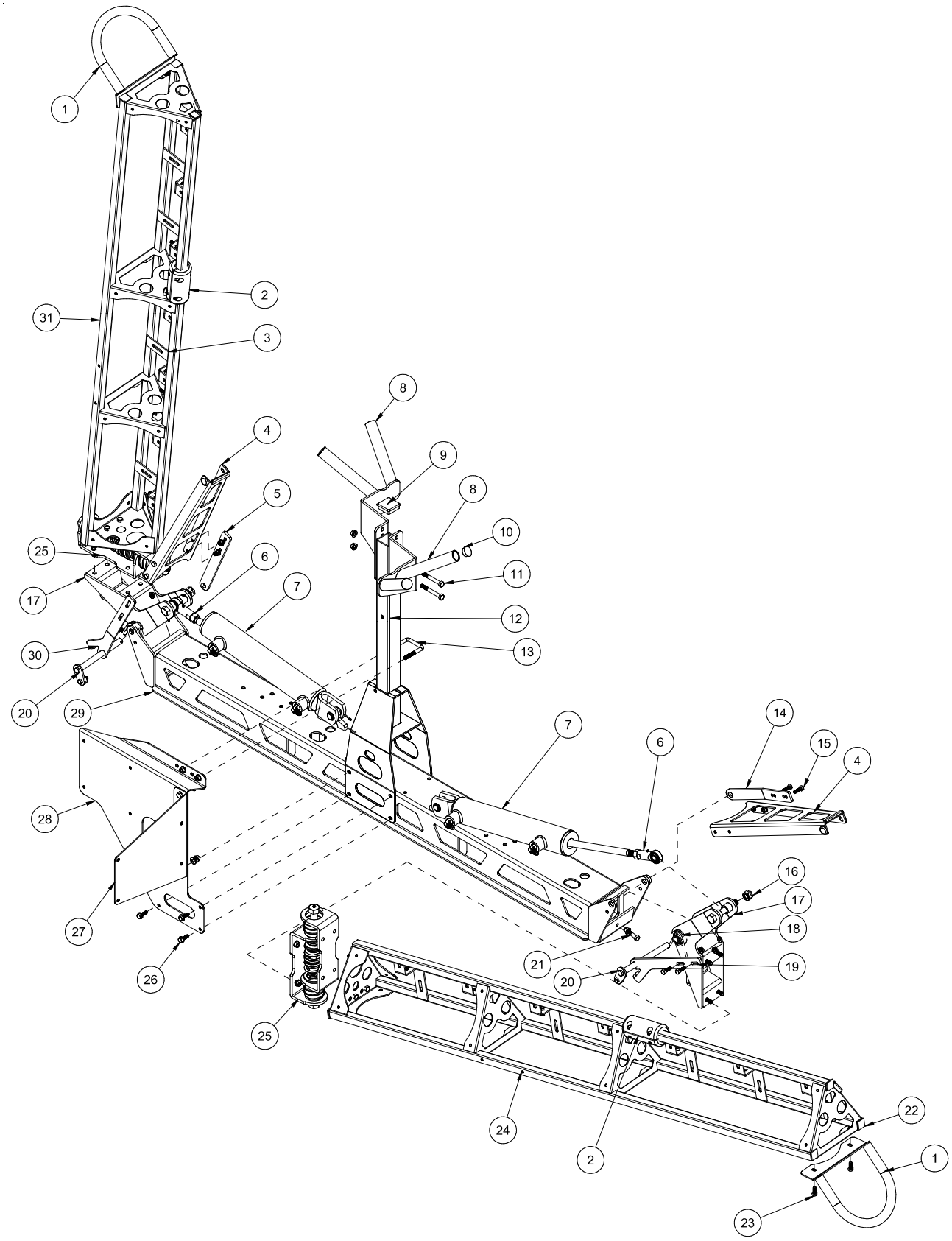

32-520 20' BOOM ASSEMBLY

REF#	PART#	DESCRIPTION	QUANTITY
1	17-541	Boom End Guard	2
2	17-573	Guide Boom Set	2
3	17-652	Boom Arm, LH	1
4	32-564	Boom Lock	2
	42-116	Rubber Insert	4
	8803-2.75	Trim, black w/ lace	2
5	17-592	Lock Hinge, LH	1
6	18-154	Rod End	2
	HG-14-28-180	Grease Zerk, $^1/_4$ - 28 x 180°	2
	HNJ-58-18	Jam Nut, $^5/_8$ - 18	2
7	13-406	Cylinder	2
8	32-566	Boom Cradle	2
9	18-297	Cap Plug	1
10	17-619	Push in Plug	4
11	HB-38-16-300	Bolt, $^3/_8$ - 16 x 3	2
	HNFL-38-16	Flange Lock Nut, $^3/_8$ - 16	2
12	30-576	V-Boom Nest Post	1
13	17-537	Square U-bolt	1
14	17-588	Lock Hinge, RH	1
15	HB-516-18-100	Bolt, $^5/_{16}$ -18 x 1	8
	HW-516	Flat Washer,$^5/_{16}$	8
	HNFL-516-18	Flange Lock Nut, $^5/_{16}$ - 18	8
16	HB-58-11-400	Bolt, $^5/_8$ - 11 x 4	2
	HNCL-58-11	Center Lock Nut, $^5/_8$ - 11	2
17	32-544	Arm Pivot Hinge	2
18	17-597	RH Torsion Spring	1
19	17-589	Limit Hinge, RH	1
20	17-596	Hinge pin w/ Spacer	2
	HP-18-100	Cotter Pin, $^1/_8$ x 1	2
21	HB-38-16-175	Bolt, $^3/_8$ - 16 x $1^3/_4$	2
	HNFL-38-16	Flange Lock Nut, $^3/_8$ -16	4
22	30-258	1" 10-14GA Ribbed Plug	10
23	HBFL-516-18-075	Flange Bolt, $^5/_{16}$ - 18 x $^3/_4$	4
	HNFL-516-18	Flange Lock Nut, $^5/_{16}$ - 18	4
24	17-653	Boom Arm, RH	1
25	17-632	Hinge Assembly	2
26	HB-516-18-100	Bolt, $^5/_{16}$ - 18 x 1	8
	HW-516	Flat Washer, $^5/_{16}$	8
	HNFL-516-18	Flange Lock Nut, $^5/_{16}$ - 18	8
27	17-636	Fresh Water Tank Mount	1
28	17-660	Clean Load Mount	1
29	32-563	Boom Center	1
30	17-593	Limit Hinge, LH	1
31	17-652	Boom Arm, LH	1

20' HD BOOM STANDARD NOZZLE

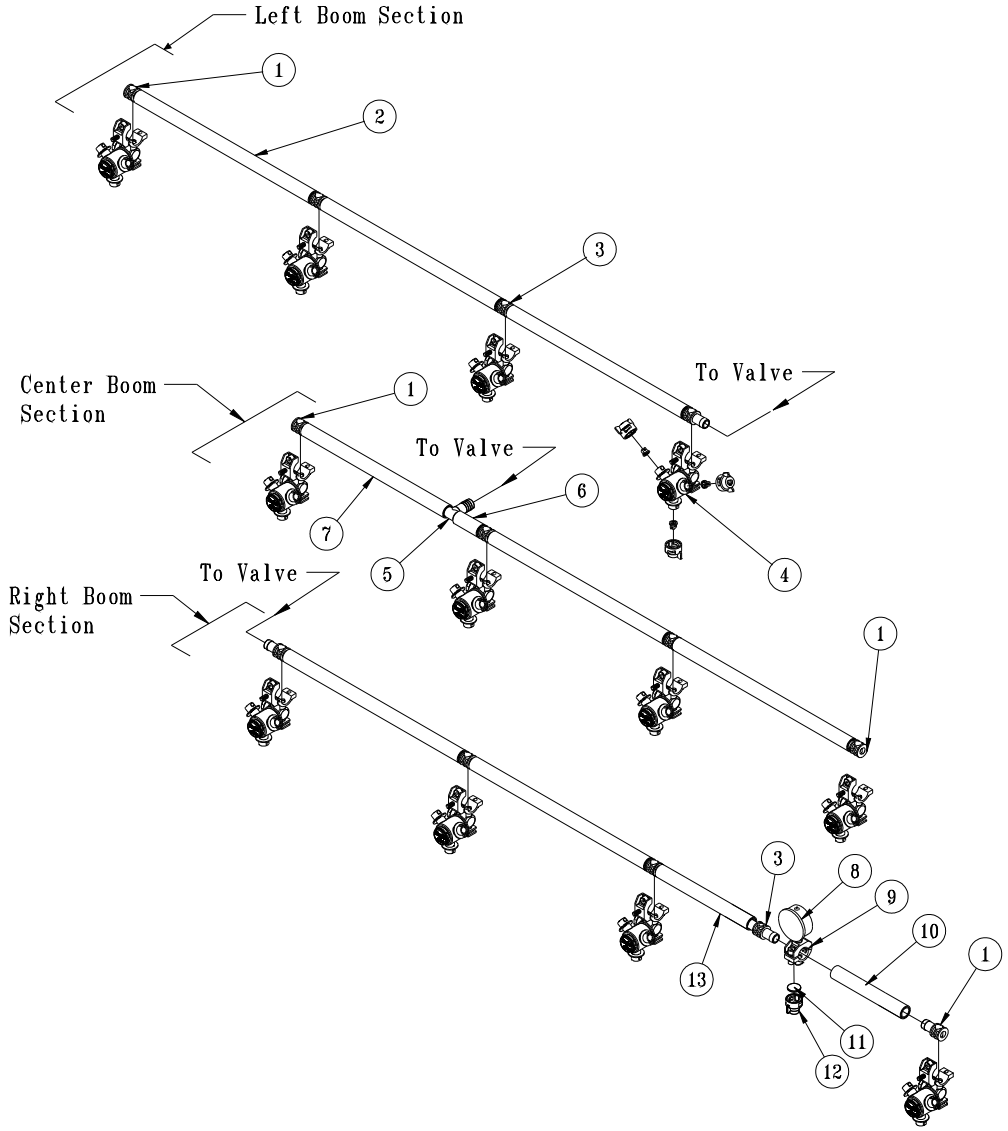

REF#	PART#	DESCRIPTION	QUANTITY
1	18-417	Single Barb	4
2	9032-19	Black Hose, 3/4" x 19"	7
	18-040	Hose Clamp	14
3	18-416	Double Barb	9
4	33-563	Nozzle body (see nozzle drawing)	12
5	18-415	3/4" Hose Barb	1
6	9032-2.5	Black Hose3/4" x 2 1/2"	1
	18-040	Hose Clamp	2
7	9032-15.5	Black Hose 3/4" x 15 1/2"	1
	18-040	Hose Clamp	2
8	16-281	Gauge	1
9	17-602	Nozzle Body	1
10	9032-5	Black Hose 3/4" x 5"	1
	18-040	Hose Clamp	2
11	16-800	Gasket	1
12	16-921	Cap	1
13	9032-13	Black Hose 3/4" x 13"	1
	18-040	Hose Clamp	2

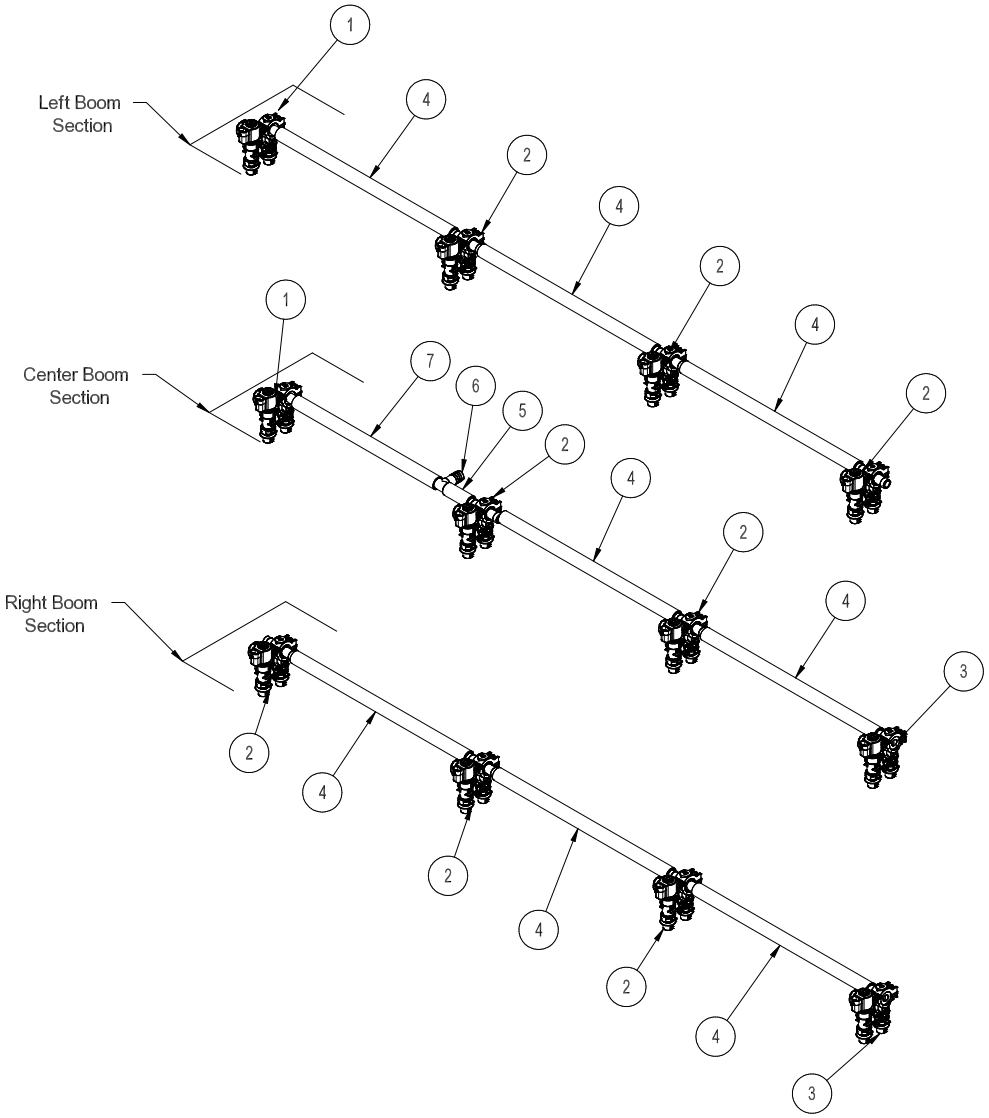

REF#	PART#	DESCRIPTION	QUANTITY
1	20-675	Single Hose Barb - Right Orientation	2
2	20-673	Single Hose Barb	8
3	20-674	Single Hose Barb - Left Orientation	2
4	9032-19	Black Hose, $^3/_4$" x 19"	8
	18-040	Hose Clamp	16
5	9032-2.5	Black Hose, $^3/_4$" x $2^1/_2$"	1
	18-040	Hose Clamp	2
6	18-415	$^3/_4$" Hose Barb	1
7	9032-15.5	Black Hose, $^3/_4$" x $15^1/_2$"	1
	18-040	Hose Clamp	2

20' HD BOOM STAR COMMNAD II

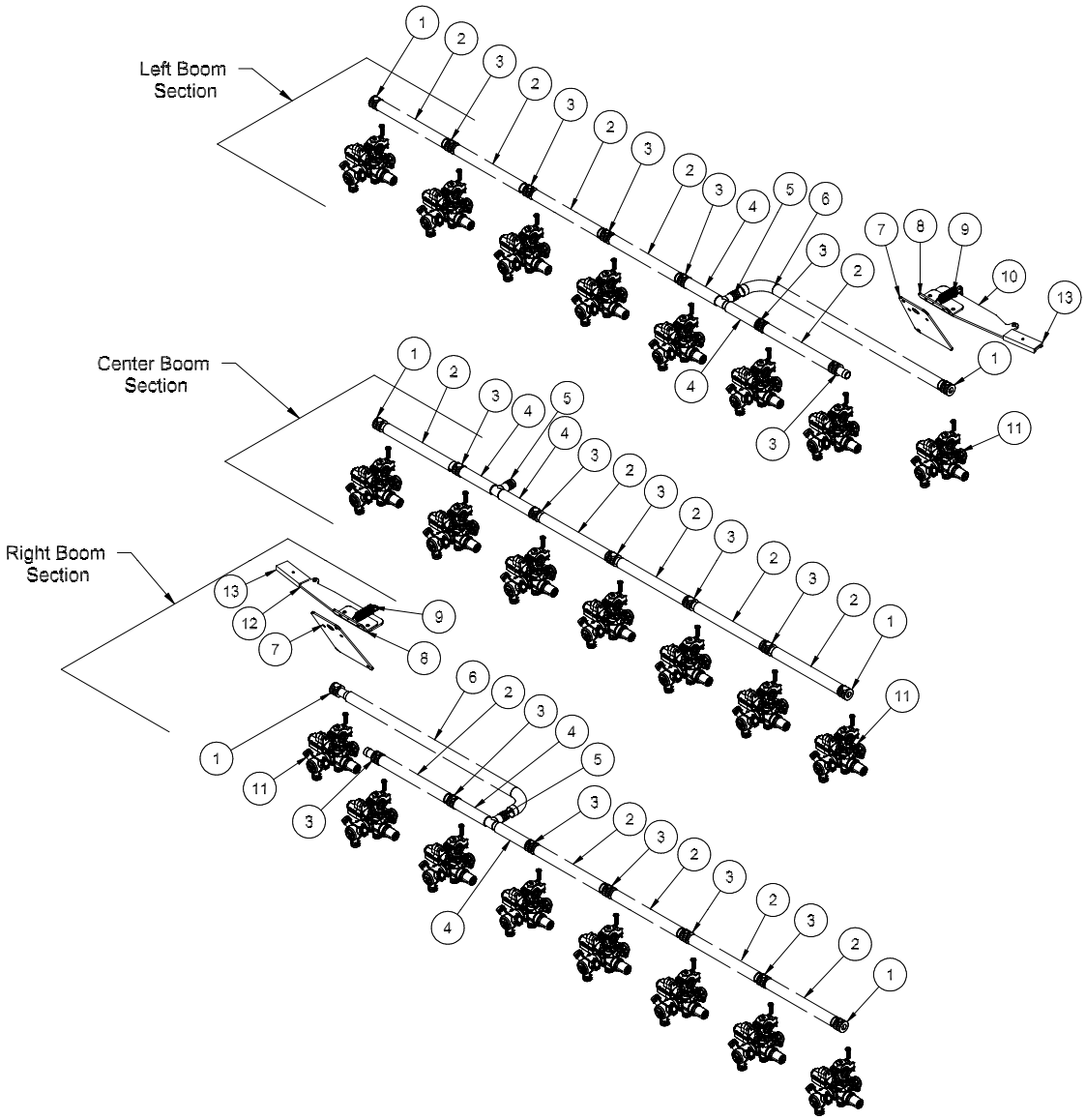

REF#	PART#	DESCRIPTION	QUANTITY
1	18-417	Single Barb	6
2	9032-8.5	Black Hose, 3/4" x 8.5"	15
	18-040	Hose Clamp	30
3	18-416	Double Barb	17
4	9032-4	Black Hose3/4" x 4"	6
	18-040	Hose Clamp	12
5	18-415	3/4" Hose Barb	3
6	9032-28	Black Hose 3/4" x 28"	2
	18-040	Hose Clamp	4
7	17-559	Break-Away Mount	2
8	17-560	Hinge Mount	2
9	11-050	Spring	2
10	17-562	LH Break-Away Arm	1
11	20-807	Nozzle Body	23
12	17-561	RH Break-Away Arm	1

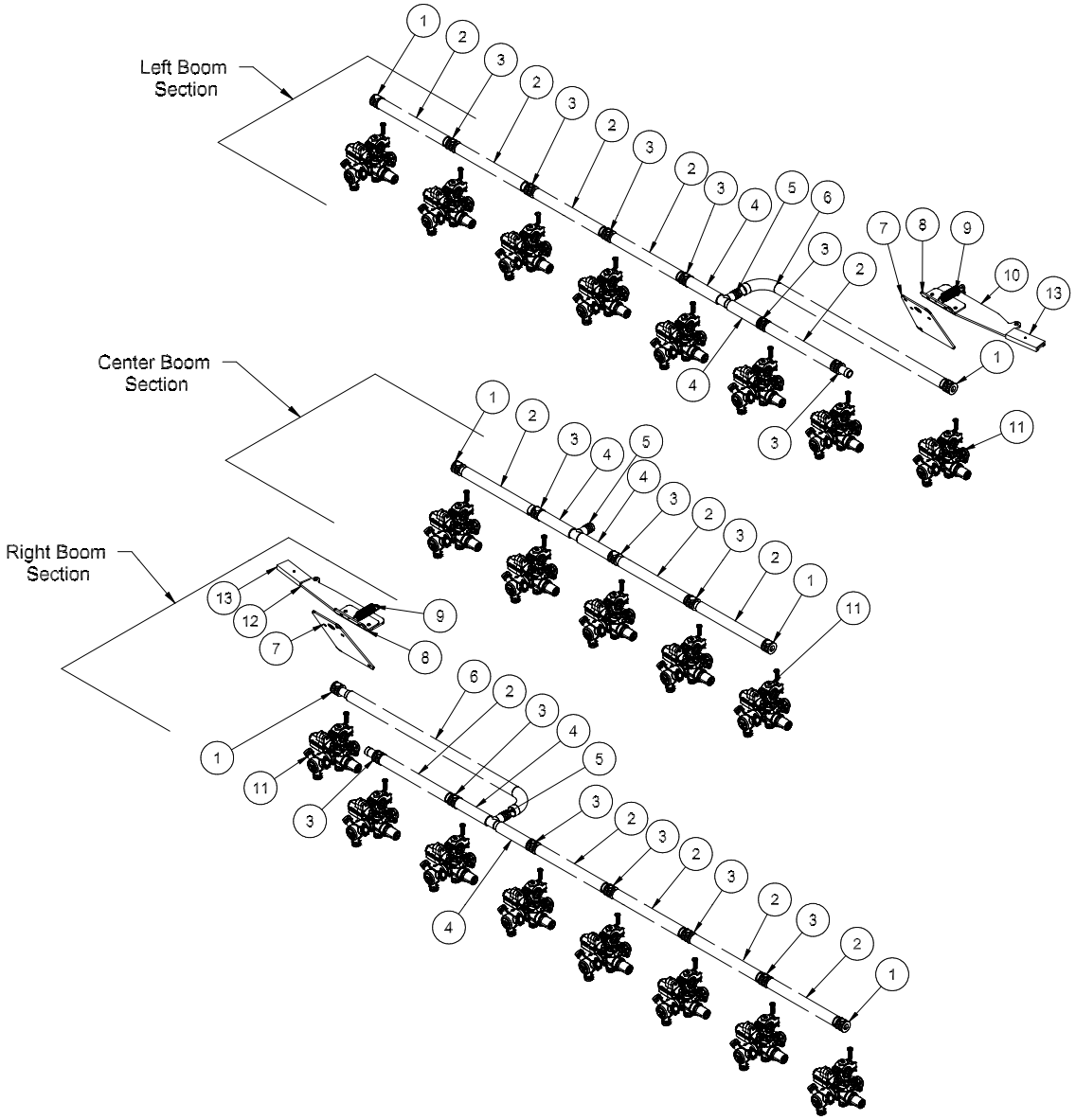

REF#	PART#	DESCRIPTION	QUANTITY
1	18-417	Single Barb	6
2	9032-8.5	Black Hose, 3/4" x 8.5"	13
	18-040	Hose Clamp	26
3	18-416	Double Barb	15
4	9032-4	Black Hose3/4" x 4"	6
	18-040	Hose Clamp	12
5	18-415	3/4" Hose Barb	3
6	9032-28	Black Hose 3/4" x 15 1/2"	2
	18-040	Hose Clamp	4
7	17-559	Break-Away Mount	2
8	17-560	Hinge Mount	2
9	11-050	Spring	2
10	17-562	LH Break-Away Arm	1
11	20-837	Nozzle Body	21
12	17-561	RH Break-Away Arm	1

18' HD BOOM STANDARD NOZZLE

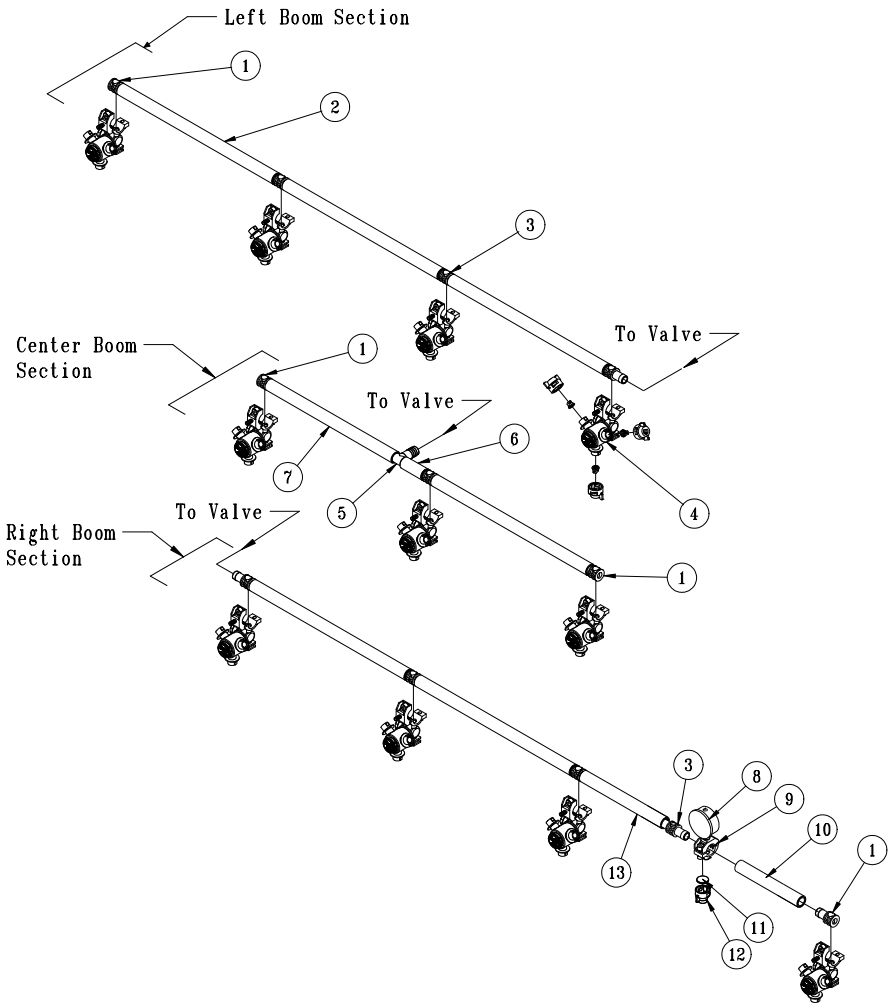

REF#	PART#	DESCRIPTION	QUANTITY
1	18-417	Single Barb	4
2	9032-19	Black Hose, 3/4" x 19"	6
	18-040	Hose Clamp	12
3	18-416	Double Barb	8
4	33-563	Nozzle body (see nozzle drawing)	11
5	18-415	3/4" Hose Barb	1
6	9032-2.5	Black Hose, 3/4" x 2 1/2"	1
	18-040	Hose Clamp	2
7	9032-15.5	Black Hose, 3/4" x 15 1/2"	1
	18-040	Hose Clamp	2
8	16-281	Gauge	1
9	17-602	Nozzle Body	1
10	9032-5	Black Hose, 3/4" x 5"	1
	18-040	Hose Clamp	2
11	16-800	Gasket	1
12	16-921	Cap	1
13	9032-13	Black Hose, 3/4" x 13"	1
	18-040	Hose Clamp	2

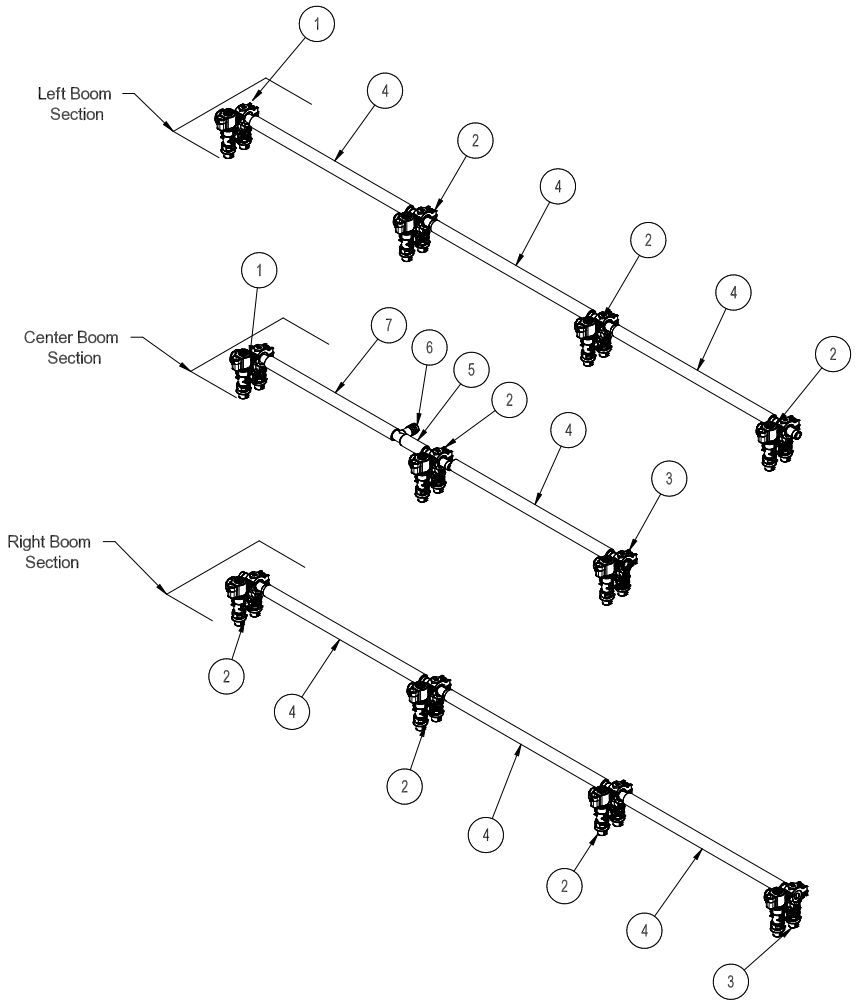

REF#	PART#	DESCRIPTION	QUANTITY
1	20-675	Single Hose Barb - Right Orientation	2
2	20-673	Single Hose Barb	8
3	20-674	Single Hose Barb - Left Orientation	2
4	9032-19	Black Hose, $^3/_4$" x 19"	7
	18-040	Hose Clamp	14
5	9032-2.5	Black Hose, $^3/_4$" x $2^1/_2$"	1
	18-040	Hose Clamp	2
6	18-415	$^3/_4$" Hose Barb	1
7	9032-15.5	Black Hose, $^3/_4$" x $15^1/_2$"	1
	18-040	Hose Clamp	2

32-518 18' HD BOOM DRAWING

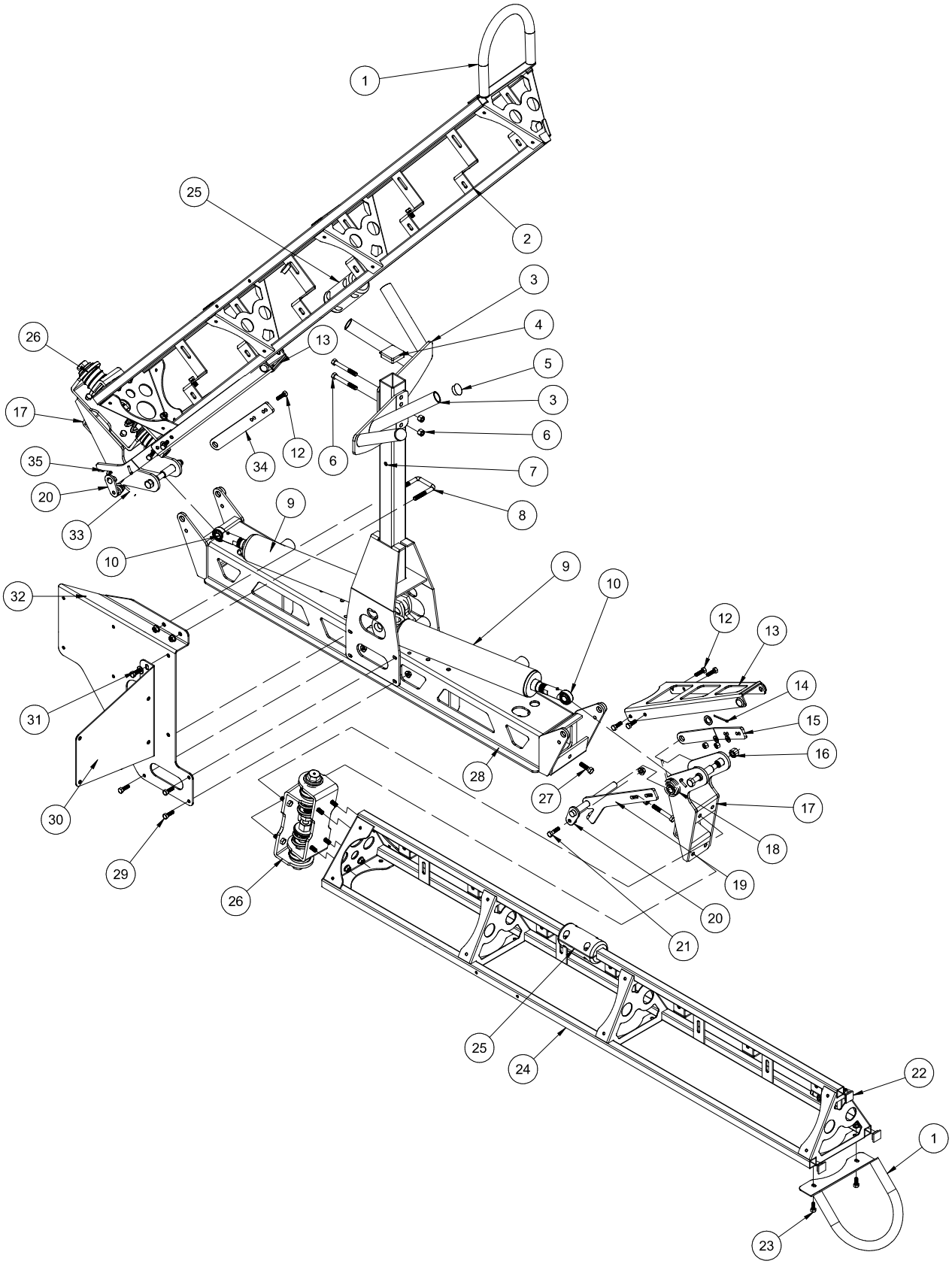

32-518 18' HD BOOM PARTS LIST

REF#	PART#	DESCRIPTION	QUANTITY
1	17-541	Boom End Guard	2
2	17-652	Boom Arm, LH	1
3	17-617	Boom Cradle	2
4	18-297	Cap Plug	1
5	17-619	Push in Plug	4
6	HB-38-16-300	Bolt, $^3/_8$ - 16 x 3	2
	HNFL-38-16	Flange Lock Nut, $^3/_8$ - 16	2
7	30-576	V-Boom Nest Post	1
8	17-537	Square U-bolt	1
9	13-406	Cylinder	2
10	18-154	Rod End	2
	HG-14-28-180	Grease Zerk, $^1/_4$ - 28 x 180°	2
	HNJ-58-18	Jam Nut, $^5/_8$ - 18	2
12	HB-516-18-100	Bolt, $^5/_{16}$ -18 x 1	8
	HW-516	Flat Washer,$^5/_{16}$	8
	HNFL-516-18	Flange Lock Nut, $^5/_{16}$ - 18	8
13	32-564	Boom Lock	2
	42-116	Rubber Insert	4
14	HP-18-100	Cotter Pin, $^1/_8$ x 1	2
15	17-592	Lock Hinge, LH	1
16	HB-58-11-400	Bolt, $^5/_8$ - 11 x 4	2
	HNCL-58-11	Center Lock Nut, $^5/_8$ - 11	2
17	32-544	Arm Pivot Hinge	2
18	17-598	LH Torsion Spring	1
19	17-593	Limit Hinge, LH	1
20	17-596	Hinge pin w/ Spacer	2
21	HB-516-18-100	Bolt, $^5/_{16}$ - 18 x 1	2
	HNFL-516-18	Flange Lock Nut, $^5/_{16}$ - 18	2
22	30-258	1" 10-14GA Ribbed Plug	10
23	HBFL-516-18-075	Flange Bolt, $^5/_{16}$ - 18 x $^3/_4$	4
	HNFL-516-18	Flange Lock Nut, $^5/_{16}$ - 18	4
24	17-653	Boom Arm, RH	1
25	17-573	Guide Boom Set	2
26	17-632	Hinged Assembly	2
27	HB-38-16-175	Bolt, $^3/_8$ - 16 x $1^3/_4$	2
	HNFL-38-16	Flange Lock Nut, $^3/_8$ -16	4
28	30-578	Boom Center	1
29	HB-516-18-100	Bolt, $^5/_{16}$ - 18 x 1	8
	HW-516	Flat Washer, $^5/_{16}$	8
	HNFL-516-18	Flange Lock Nut, $^5/_{16}$ - 18	8
30	17-636	Fresh Water Tank Mount	1
31	HB-38-16-100	Bolt, $^3/_8$ - 16 x 1	2
	HW-38	Flat Washer, $^3/_8$	2
	HNFL-38-16	Flange Lock Nut, $^3/_8$ - 16	2
32	17-660	Clean Load Mount	1
33	17-597	RH Torsion Spring	1
34	17-588	Lock Hinge, RH	1
35	17-589	Limit Hinge, RH	1

32-516 24' HD BOOM DRAWING

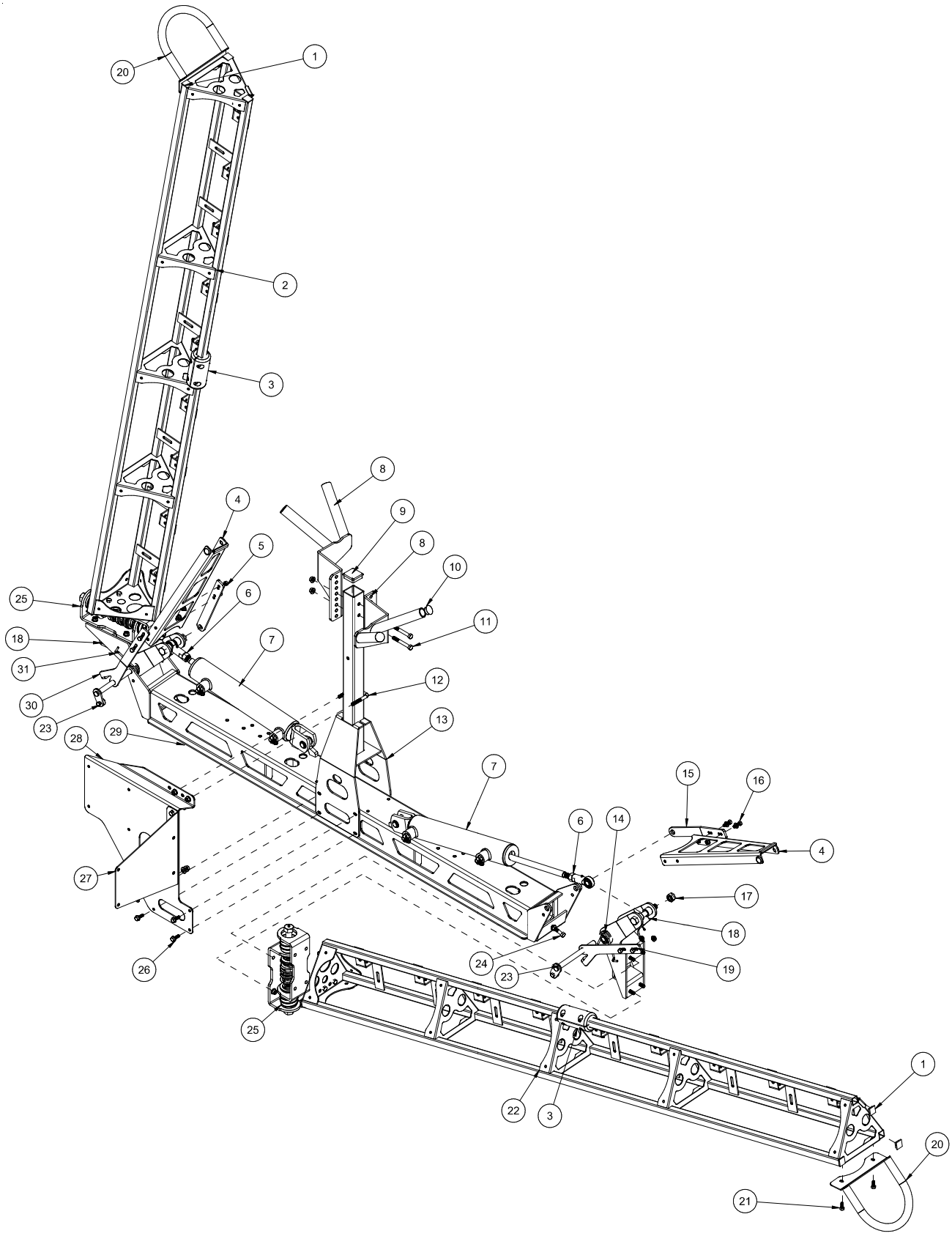

32-516 24' HD BOOM PARTS LIST

REF#	PART#	DESCRIPTION	QUANTITY
1	30-258	1" 10-14GA Ribbed Plug	10
2	32-562	Boom Arm, LH	1
3	17-573	Guide Boom Set	2
4	32-564	Boom Lock	2
	42-116	Rubber Insert	4
5	17-592	Lock Hinge, LH	1
6	18-154	Rod End	2
	HG-14-28-180	Grease Zerk, $^1/_4$ - 28 x 180°	2
	HNJ-58-18	Jam Nut, $^5/_8$ - 18	2
7	13-406	Cylinder	2
8	32-566	Boom Cradle	2
9	18-297	Cap Plug	1
10	17-619	Push in Plug	4
11	HB-38-16-300	Bolt, $^3/_8$ - 16 x 3	2
	HNFL-38-16	Flange Lock Nut, $^3/_8$ - 16	2
12	17-537	Square U-bolt	1
13	17-578	V-Boom Nest Post	1
14	17-597	RH Torsion Spring	1
15	17-588	Lock Hinge, RH	1
16	HB-516-18-100	Bolt, $^5/_{16}$ -18 x 1	8
	HW-516	Flat Washer,$^5/_{16}$	8
	HNFL-516-18	Flange Lock Nut, $^5/_{16}$ - 18	8
17	HB-58-11-400	Bolt, $^5/_8$ - 11 x 4	2
	HNCL-58-11	Center Lock Nut, $^5/_8$ - 11	2
18	32-544	Arm Pivot Hinge	2
19	17-589	Limit Hinge, RH	1
20	17-541	Boom End Guard	2
21	HBFL-516-18-075	Flange Bolt, $^5/_{16}$ - 18 x $^3/_4$	2
	HNFL-516-18	Flange Lock Nut, $^5/_{16}$ - 18	2
22	32-561	Boom Arm, RH	1
23	17-596	Hinge pin w/ Spacer	2
	HB-516-18-100	Bolt, $^5/_{16}$ - 18 x 1	2
	HNFL-516-18	Flange Lock Nut, $^5/_{16}$ - 18	2
24	HB-38-16-175	Bolt, $^3/_8$ - 16 x $1^3/_4$	2
	HNFL-38-16	Flange Lock Nut, $^3/_8$ -16	4
25	17-632	Boom Hinge	2
26	HB-516-18-100	Bolt, $^5/_{16}$ - 18 x 1	8
	HW-516	Flat Washer, $^5/_{16}$	8
	HNFL-516-18	Flange Lock Nut, $^5/_{16}$ - 18	8
27	17-636	Fresh Water Tank Mount	1
28	17-660	Clean Load Mount	1
29	32-563	Boom Center	1
30	17-593	Limit Hinge, LH	1
31	17-598	LH Torsion Spring	1

24' HD BOOM STANDARD NOZZLES

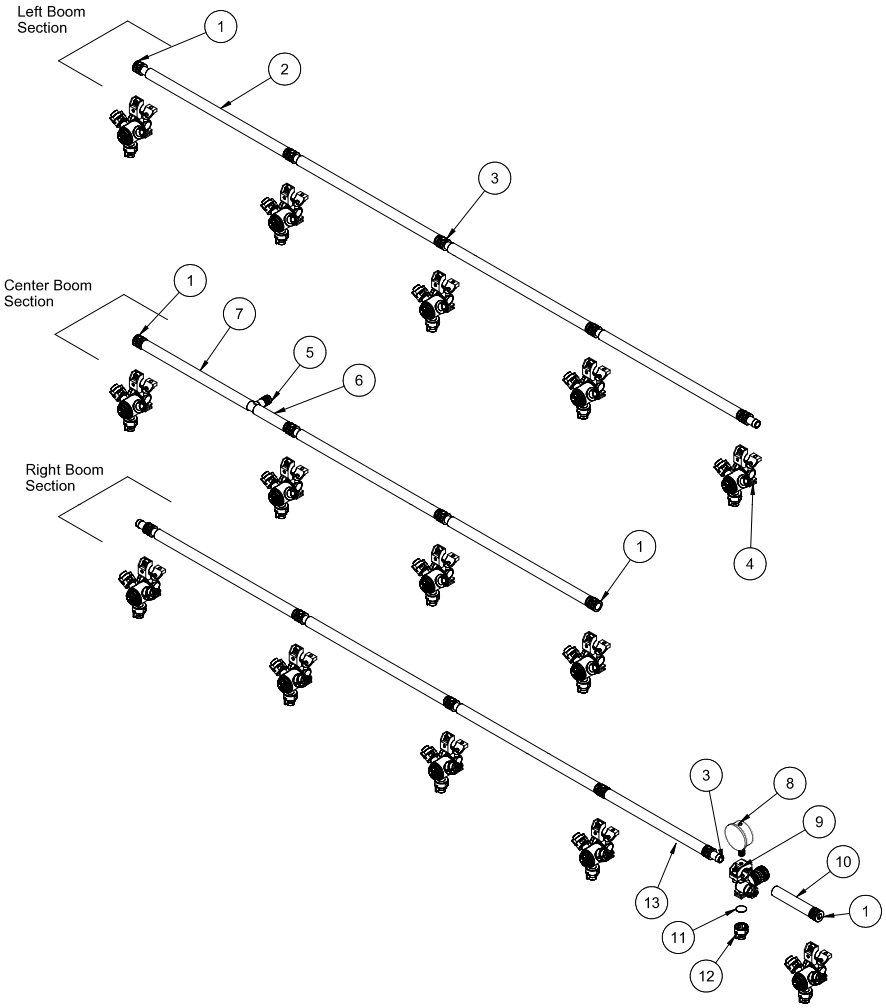

REF#	PART#	DESCRIPTION	QUANTITY
1	18-417	Single Barb	4
2	9032-19	Black Hose, 3/4" x 19"	9
	18-040	Hose Clamp	18
3	18-416	Double Barb	11
4	33-563	Nozzle body (see nozzle drawing)	14
5	18-415	3/4" Hose Barb	1
6	9032-2.5	Black Hose, 3/4" x 2 1/2"	1
	18-040	Hose Clamp	2
7	9032-15.5	Black Hose, 3/4" x 15 1/2"	1
	18-040	Hose Clamp	2
8	16-281	Gauge	1
9	17-602	Nozzle Body	1
10	9032-5	Black Hose, 3/4" x 5"	1
	18-040	Hose Clamp	2
11	16-800	Strainer	1
12	16-921	Nozzle	1
13	9032-13	Black Hose, 3/4" x 13"	1
	18-040	Hose Clamp	2

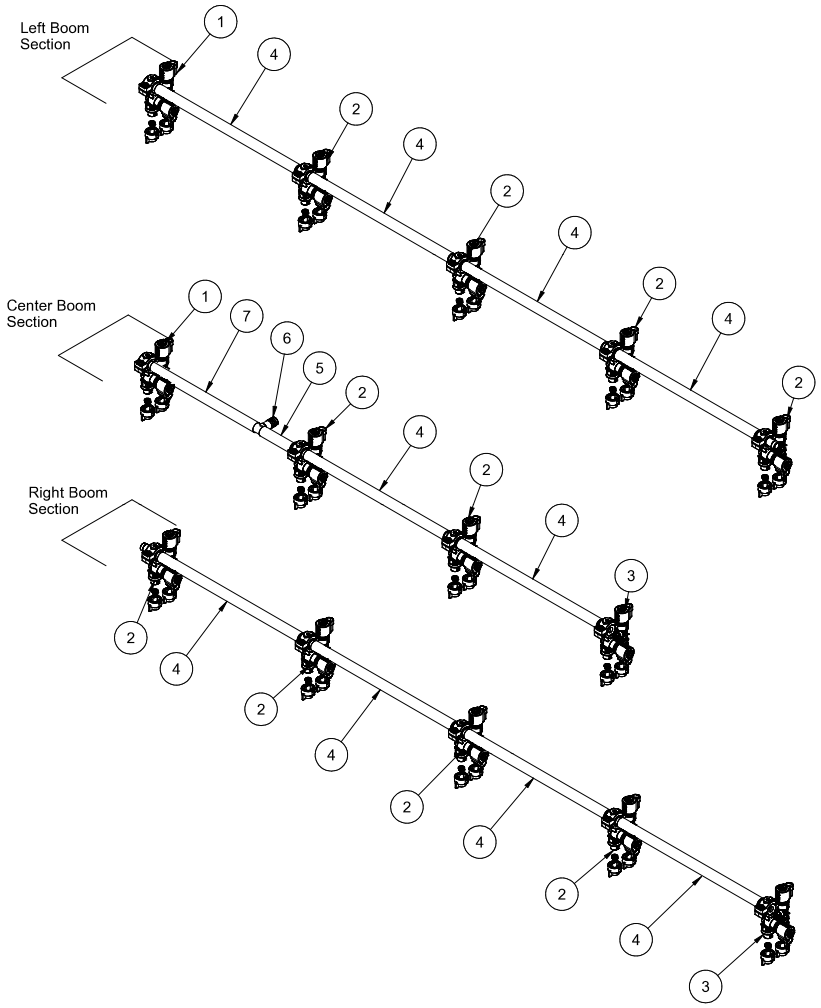

REF#	PART#	DESCRIPTION	QUANTITY
1	20-675	Single Hose Barb - Right Orientation	2
2	20-673	Single Hose Barb	10
3	20-674	Single Hose Barb - Left Orientation	2
4	9032-19	Black Hose, $^3/_4$" x 19"	10
	18-040	Hose Clamp	20
5	9032-2.5	Black Hose, $^3/_4$" x $2^1/_2$"	1
	18-040	Hose Clamp	2
6	18-415	$^3/_4$" Hose Barb	1
7	9032-15.5	Black Hose, $^3/_4$" x $15^1/_2$"	1
	18-040	Hose Clamp	2

24' HD BOOM STAR COMMAND II NOZZLES

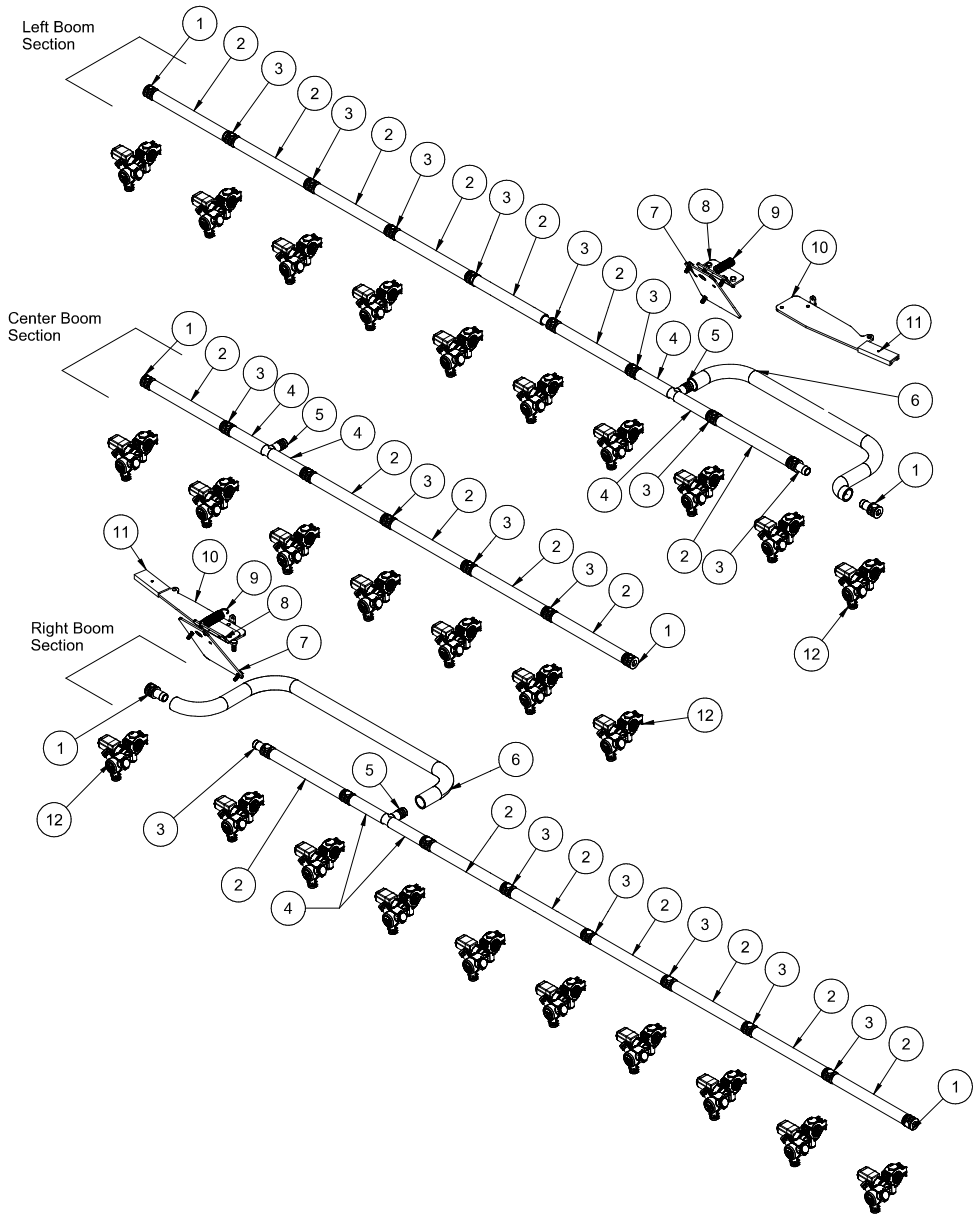

REF#	PART#	DESCRIPTION	QUANTITY
1	18-417	Single Barb	6
2	9032-8.5	Black Hose, 3/4" x 8.5"	19
	18-040	Hose Clamp	38
3	18-416	Double Barb	21
4	9032-4	Black Hose3/4" x 4"	6
	18-040	Hose Clamp	12
5	18-415	3/4" Hose Barb	3
6	9032-28	Black Hose 3/4" x 28"	2
	18-040	Hose Clamp	4
7	17-559	Break-Away Mount	2
8	17-560	Hinge Mount	2
9	11-050	Spring	2
10	17-562	LH Break-Away Arm	1
11	20-807	Nozzle Body	27
12	17-561	RH Break-Away Arm	1

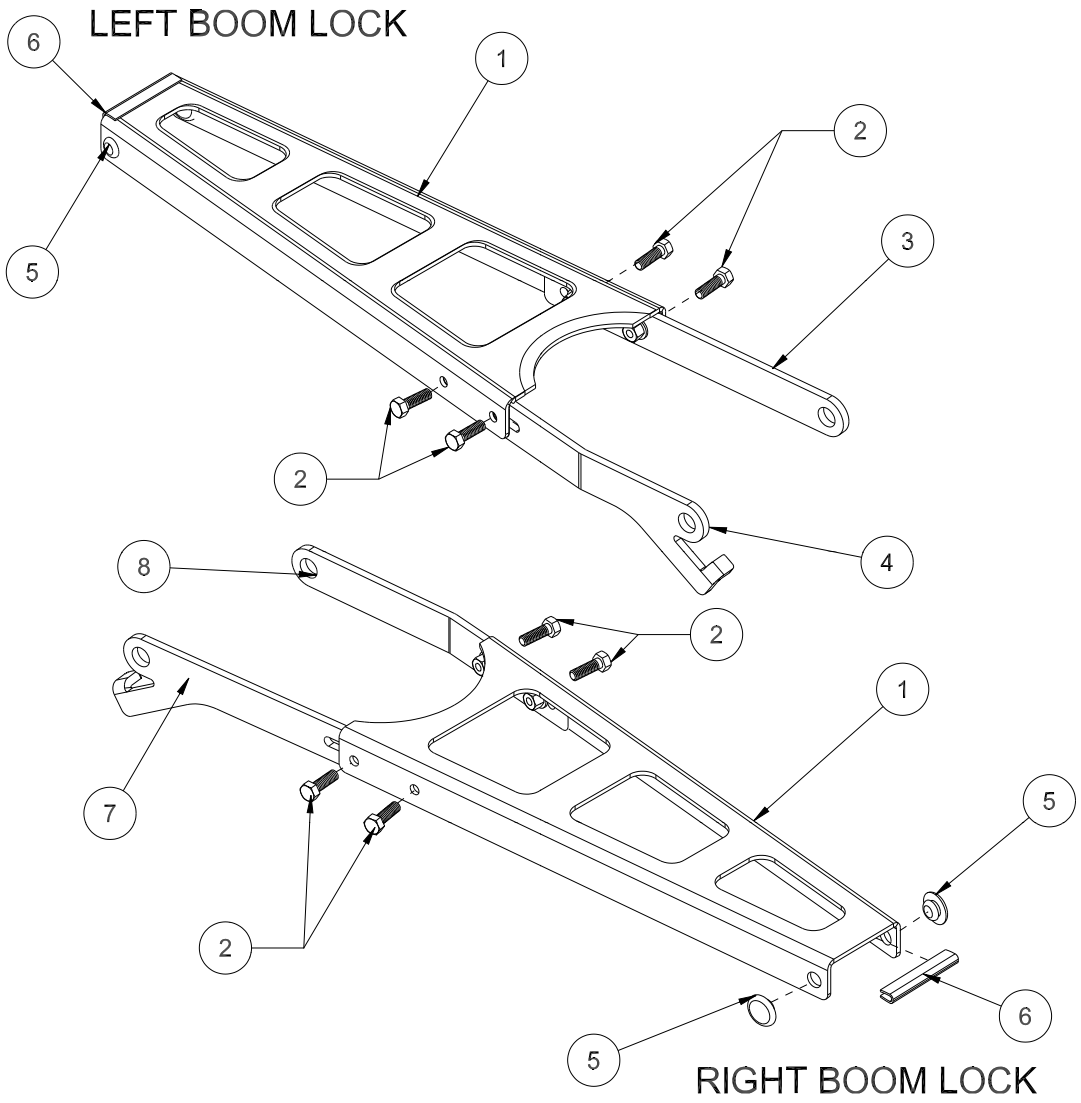

REF#	PART#	DESCRIPTION	QUANTITY	
1	32-564	Boom Lock	2	
2	HB-516-18-100	Bolt, $^{5}/_{16}$ -18 x 1	8	
	HW-516	Flat Washer,$^{5}/_{16}$	8	
	HNFL-516-18	Flange Lock Nut, $^{5}/_{16}$ - 18	8	
3	17-592	Lock Hinge, LH	1	
4	17-593	Limit Hinge, LH	1	
5	42-116	Rubber Insert	4	
6	8803-2.75	Trim, black w/ lace	2	
7	17-589	Limit Hinge, RH	1	
8	17-588	Lock Hinge, RH	1	R

HINGE ASSEMBLED

2 HINGE ASSEMBLIES PER BOOM

*17-632-K Boom Hinge Complete

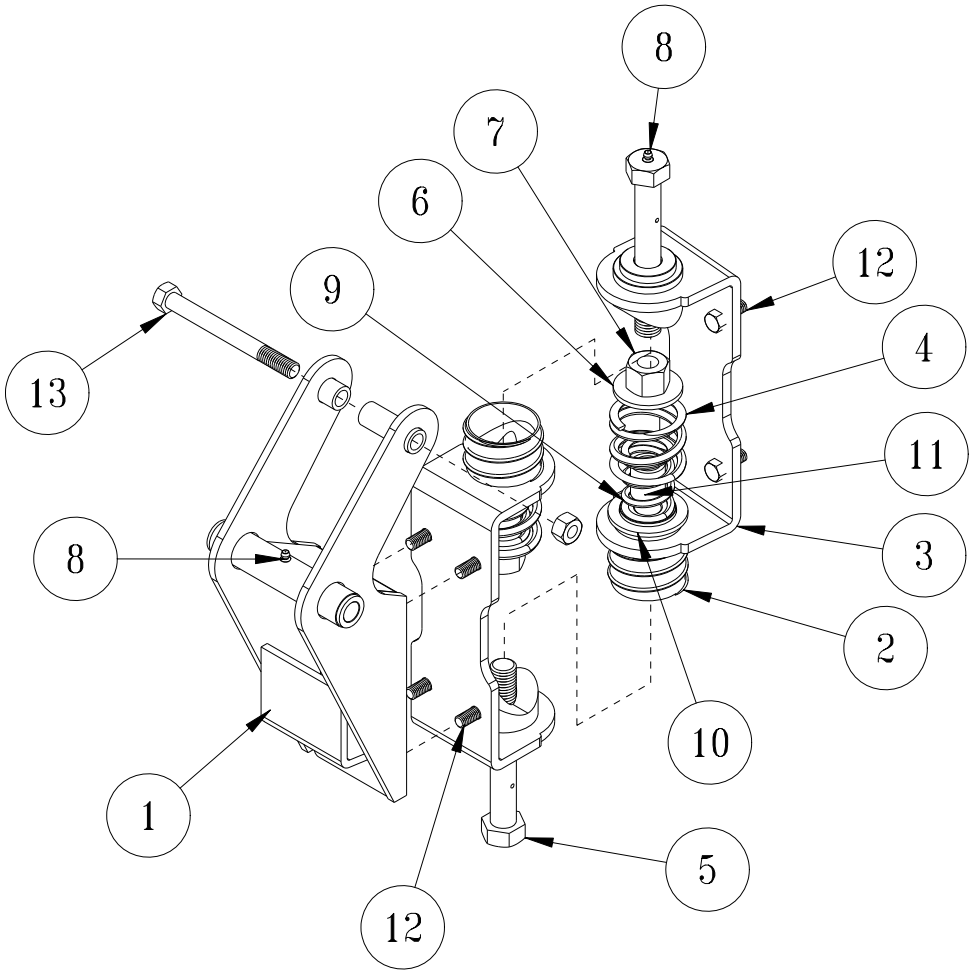

REF#	PART#	DESCRIPTION	QUANTITY
1	30-185	Arm Pivot Hinge (part of boom)	1
	HG-14-28-180	Grease Zerk (part of boom)	1
2*	9026-2	Rubber Duct Hose, 2"	2
3*	17-527	Boom Hinge	1
4*	17-539	Compression Spring	2
5*	17-540	Tapped Bolt	2
6*	HW-34	Flat Washer, 3/4	2
7*	HNCL-34-10	Center Lock Nut, 3/4 - 10	2
8*	HG-14-28-180	Grease Zerk	2
9*	17-591	Compression Spring	2
10*	17-599	Spring Shim	2
11*	17-594	Spring Sleeve	2
12*	HB-38-16-100	Hex Bolt, 3/8 -16 x 1	8
	HNFL-38-16	Flange Lock Nut, 3/8 -16	8
13	HB-12-13-500	Hex Bolt, 1/2 - 13 x 5	1
	HNTL-12-13	Lock Nut, 1/2 - 13	1

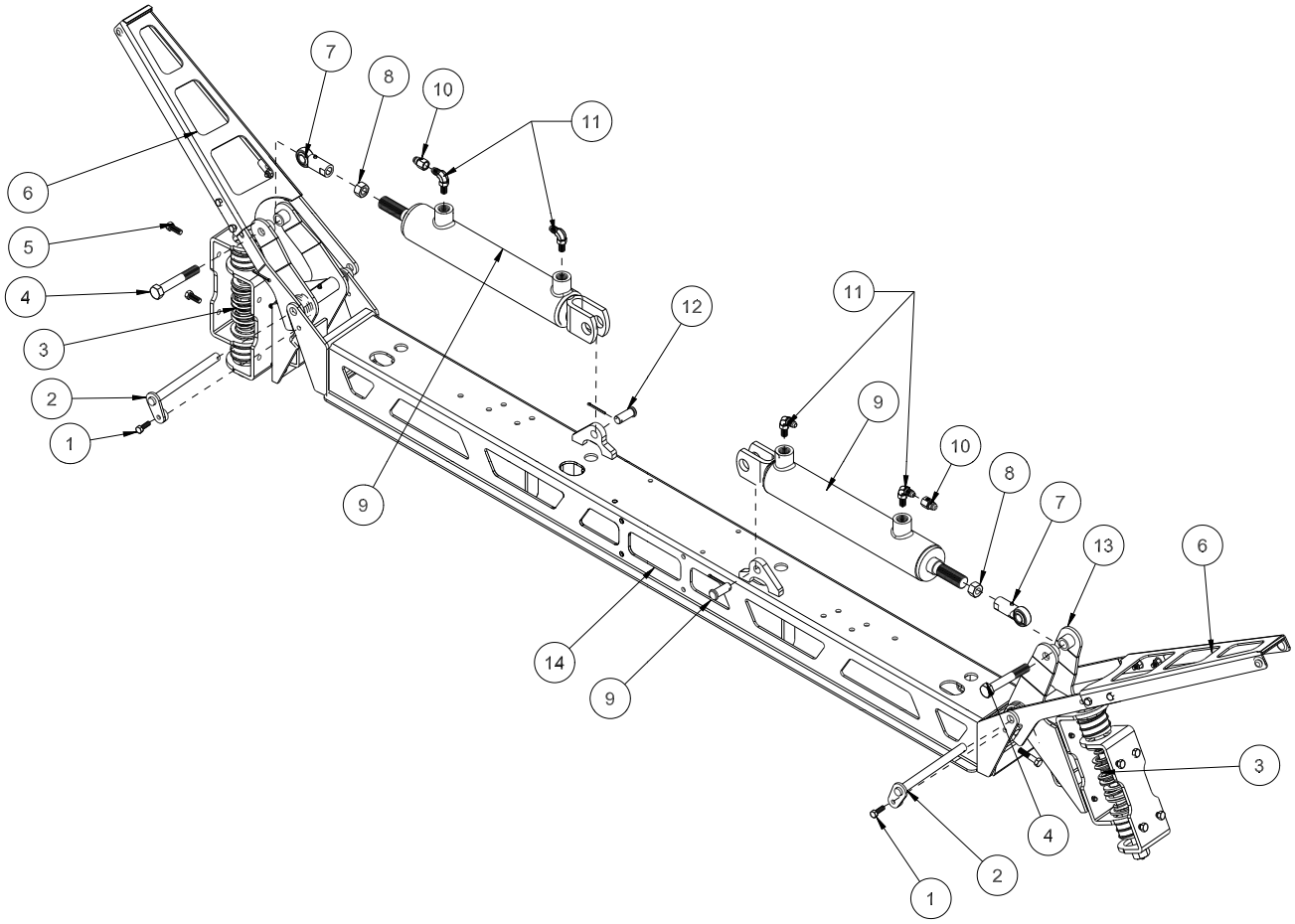

REF#	PART#	DESCRIPTION	QUANTITY
1	HB-516-18-100	Bolt, $^{5}/_{16}$ - 18 x 1	2
	HNFL-516-18	Flange Lock Nut, $^{5}/_{16}$ - 18	2
2	17-596	Hinge Pin w/Spacer	2
	HP-18-100	Cotter Pin, $^{1}/_{8}$ x 1	2
3	17-632	Boom Hinge Complete	2
4	HB-58-11-400	Bolt, $^{5}/_{8}$ - 11 x 4	2
	HNCL-58-11	Center Lock Nut, $^{5}/_{8}$ - 11	2
5	HB-38-16-100	Bolt, $^{3}/_{8}$ - 16 x 1	8
	HNFL-38-16	Flange Lock Nut, $^{3}/_{8}$ - 16	8
6	32-564	Boom Lock	2
7*	18-154	Rod End	2
	HG-14-28-180	Grease Zerk, $^{1}/_{4}$ - 28 x 180°	2
8*	HNJ-58-18	Jam Nut, $^{5}/_{8}$ - 18	2
9*	13-406	Cylinder	2
10*	18-392	Orifice Adapter	2
11*	18-168	Fitting	4
12	HCP-58-150	Clevis Pin, $^{5}/_{8}$ x 1-1/2	2
	HP-18-100	Cotter Pin, $^{1}/_{8}$ x 1	2
13	32-544	Arm Pivot Hinge	2
14		Boom Center	1

* Part of Spray Star Truck

NOZZLE STAR COMMAND I DRAWING

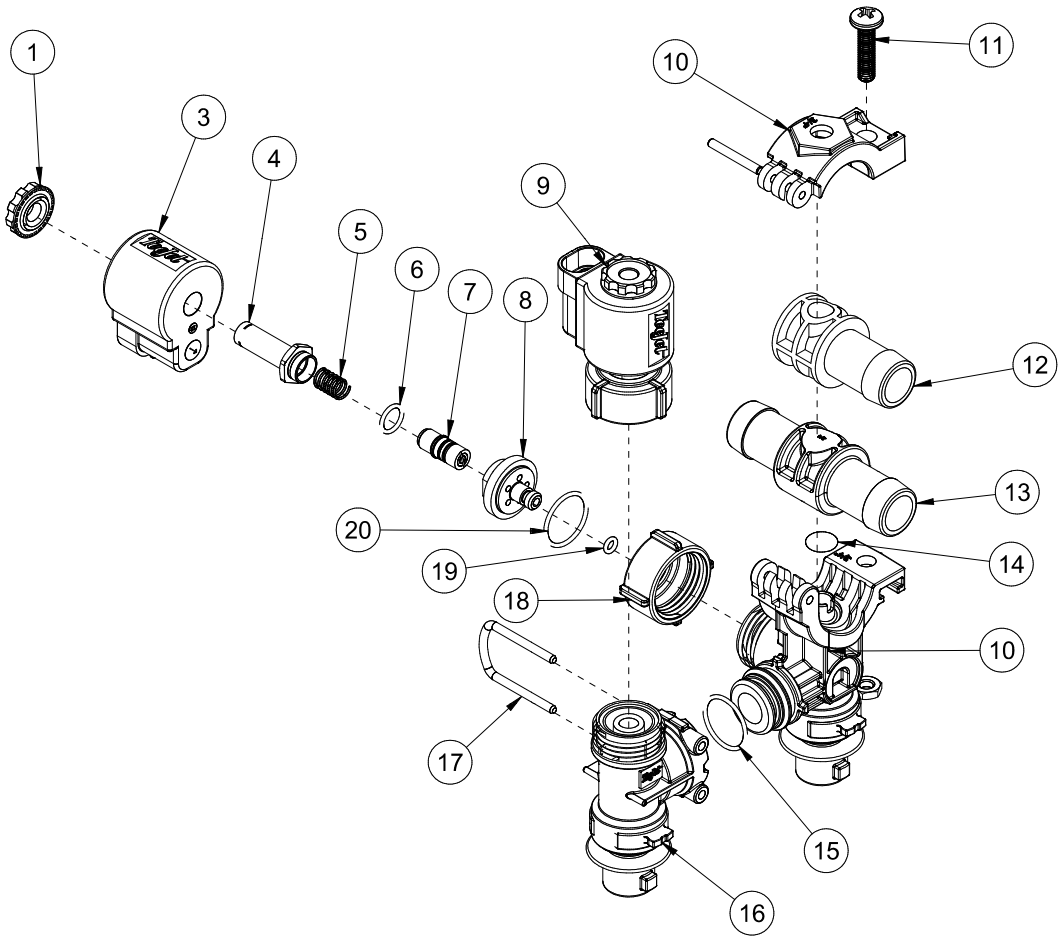

REF#	PART#	DESCRIPTION	QUANTITY
1†		Nylon Black Nut	1
3	20-673-09	12V Coil Assembly	1
4†		Tube Sub Assembly	1
5*†		302 Stainless Steel Spring	1
6*†		Viton O-ring	1
7*†		Plunger	1
8†		303 Stainless Steel Cap	1
9	20-673-02	E-Chemsaver Solenoid	1
10	20-673-04	3/4" Mount Assembly	1
11		Pan Head Screw	1
12	18-417	Single Barb (part of 20-674-P and 20-675-P)	1
13	18-416	Double Barb (part of 20-673-P)	1
14	16-920-03	O-ring	1
15	20-673-11	O-ring	1
16	20-673-05	End Body Sub-assembly	1
17	20-673-08	Retaining Clip	1
18		Locking Ring	1
19*†	20-673-07	Viton O-ring	1
20*†	20-673-06	Viton Gasket	1
*	20-673-01	Spare Parts Kit	
†	20-673-12	Field Repair Kit	

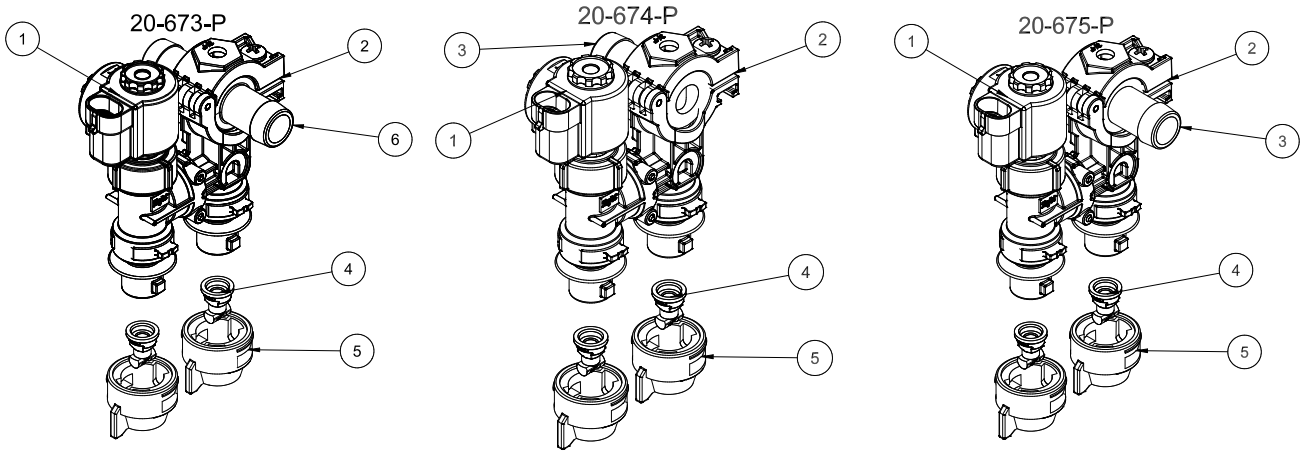

REF#	PART#	DESCRIPTION	QUANTITY
1*	20-673-02	E-Chemsaver®	1
2*	20-673-04	$^3/_4$" Bottom Mount Nozzle Body	1
3†	18-417	Single Barb	1
4	20-676	Turbo TeeJet Tip	2
5	20-677	QT White Cap and Washer	2
6‡	18-416	Double Hose Barb	1

Quantity is per nozzle body. For 18' booms multiply quantity by 11.
Quantity is per nozzle body. For 20' booms multiply quantity by 12.
Quantity is per nozzle body. For 24' booms multiply quantity by 14.

20-673	Double Hose Barb Nozzle (includes * and ‡ item)	7,8 or 10
20-674	Single Hose Barb Left Orientation (includes * and † item)	2
20-675	Single Hose Barb - Right Orientation(includes * and † item)	2

Nozzles are located 20" (51 cm) apart on the right, left, and center tubes. Nozzles are 20" high off ground.

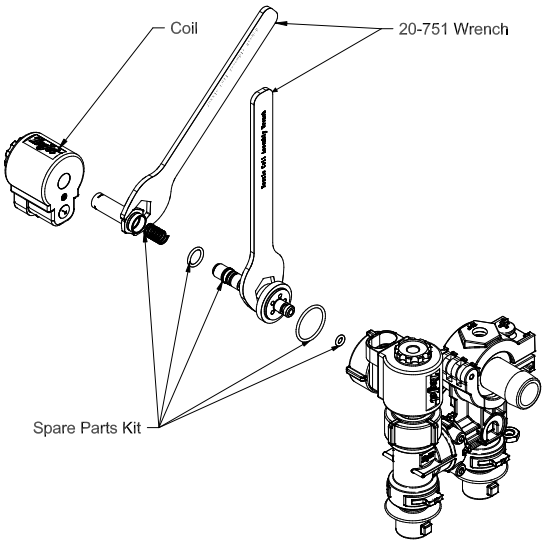

33-563 STANDARD NOZZLE ASSEMBLY

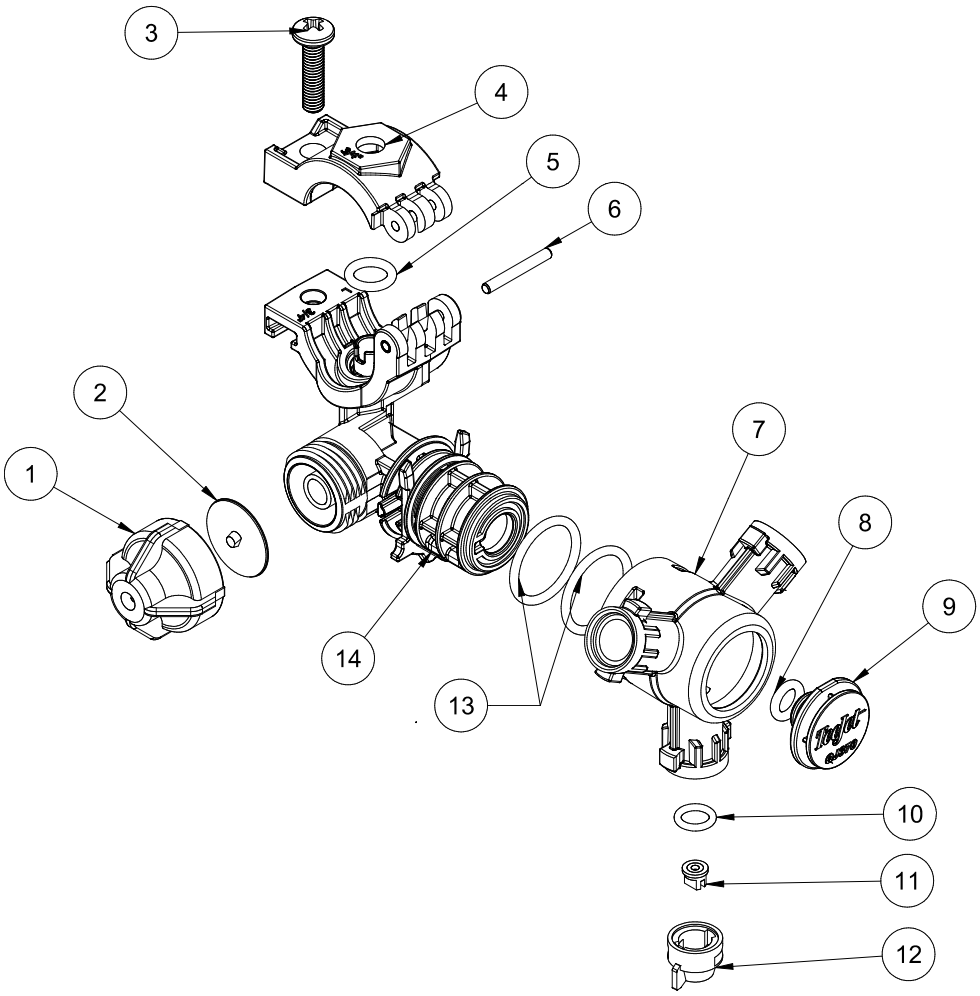

REF#	PART#	DESCRIPTION	QUANTITY
1*	16-988	Cap Assembly	1
2*	16-920-06	Diaphragm, EPDM	1
3*		Stainless Steel Screw	1
4*		Upper Clamp	1
5*	16-920-03	O-ring	1
6*		Pivot Pin, Stainless Steel	1
7*		Turret, 3-Outlet, Nylon	1
8*		O-ring, EPDM	1
9*		Plug	1
12	33-538	Cap - White	1
11	33-554	Nozzle Tip - White (XR11008-VS)	1
10	16-800	Viton Gasket	1
13*		O-ring, Teflon	2
14*	33-563	Nozzle Body (includes all * items)	1

Quantity is per nozzle body. For 18' booms multiply quantity by 11.
Quantity is per nozzle body. For 20' booms multiply quantity by 12.
Quantity is per nozzle body. For 24' booms multiply quantity by 14.

Nozzles are located 20" (51 cm) apart on the right, left, and center tubes.
Nozzles are 20" high off ground.

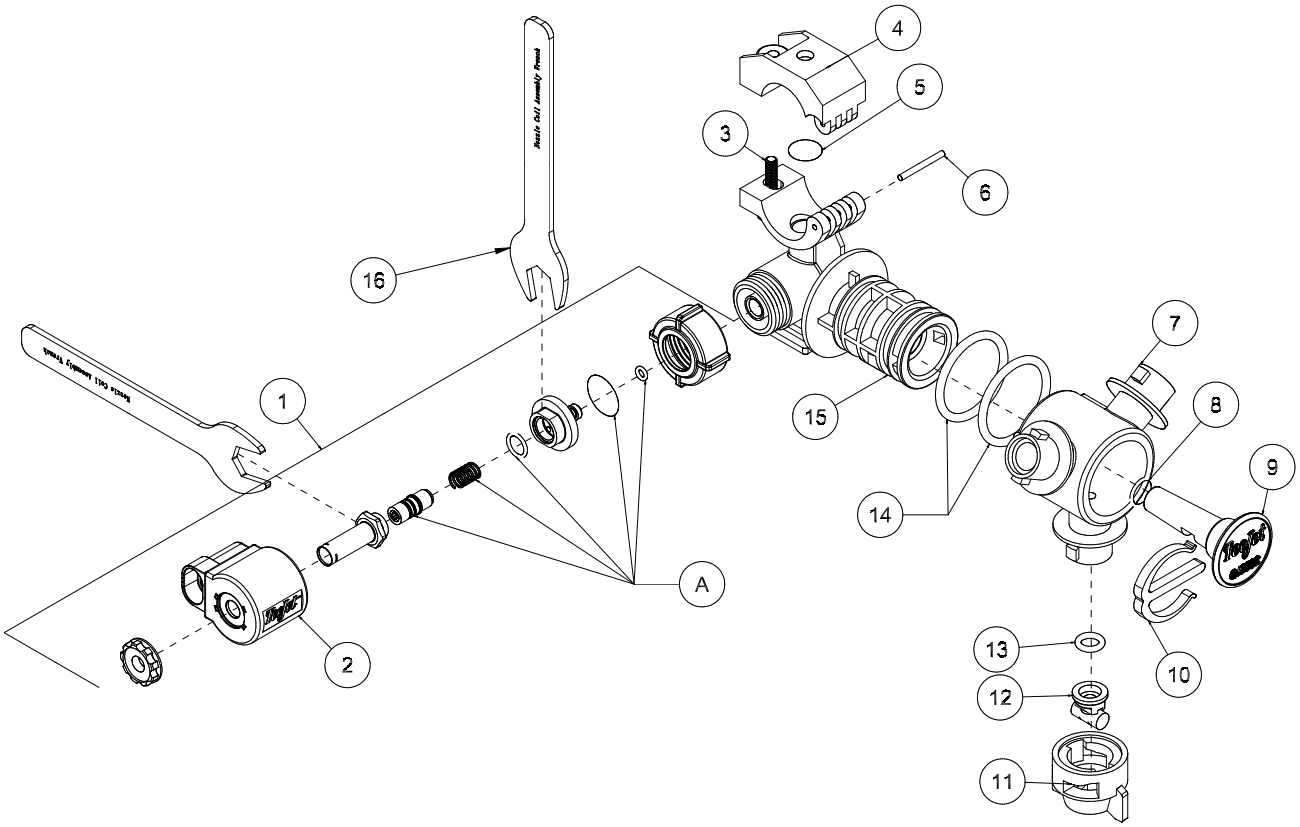

REF#	PART#	DESCRIPTION	QUANTITY
1	20-807-01	e-Chemsaver	1
2	20-751	Wrench	2
3*		Stainless Steel Screw	1
4*		Upper Clamp	1
5*	16-920-03	O-ring	1
6*		Pivot Pin, Stainless Steel	1
7*		Turret, 3-Outlet, Nylon	1
8*		O-ring, EPDM	1
9*		Plug	1
10*		E-clip	1
11	20-838	Cap - Gray	1
12	20-837	Turbo Twinjet Nozzle Tip, Cap & Gasket - Gray	1
13	16-800	Viton Gasket	1
14*		O-ring, Teflon	2
15*	33-563	Body Assembly **(includes all * items)**	1
16		Locking Ring	1
17**†	20-673-07	Viton O-ring	1
18**†	20-673-06	Viton Gasket	1
19†		303 Stainless Steel Cap	1
20**†		Viton O-ring	1
21**†		302 Stainless Steel Spring	1
22**†		Plunger	1
23†		Tube Sub Assembly	1
24	20-673-09	12V Coil	1
25†		Nylon Black Nut	1
**	20-807-02	Spare Parts Kit	
†	20-807-03	Field Repair Kit	

Quantity is per nozzle body. For 20' booms multiply quantity by 23. For 18' booms multiply quantity by 21. For 15' booms multiply quantity by 17. Nozzles are located 10" (25 cm) apart on the right, left, and center tubes. Nozzles are 20" high off ground.

30-501 ELECTRIC HOSE REEL DRAWING

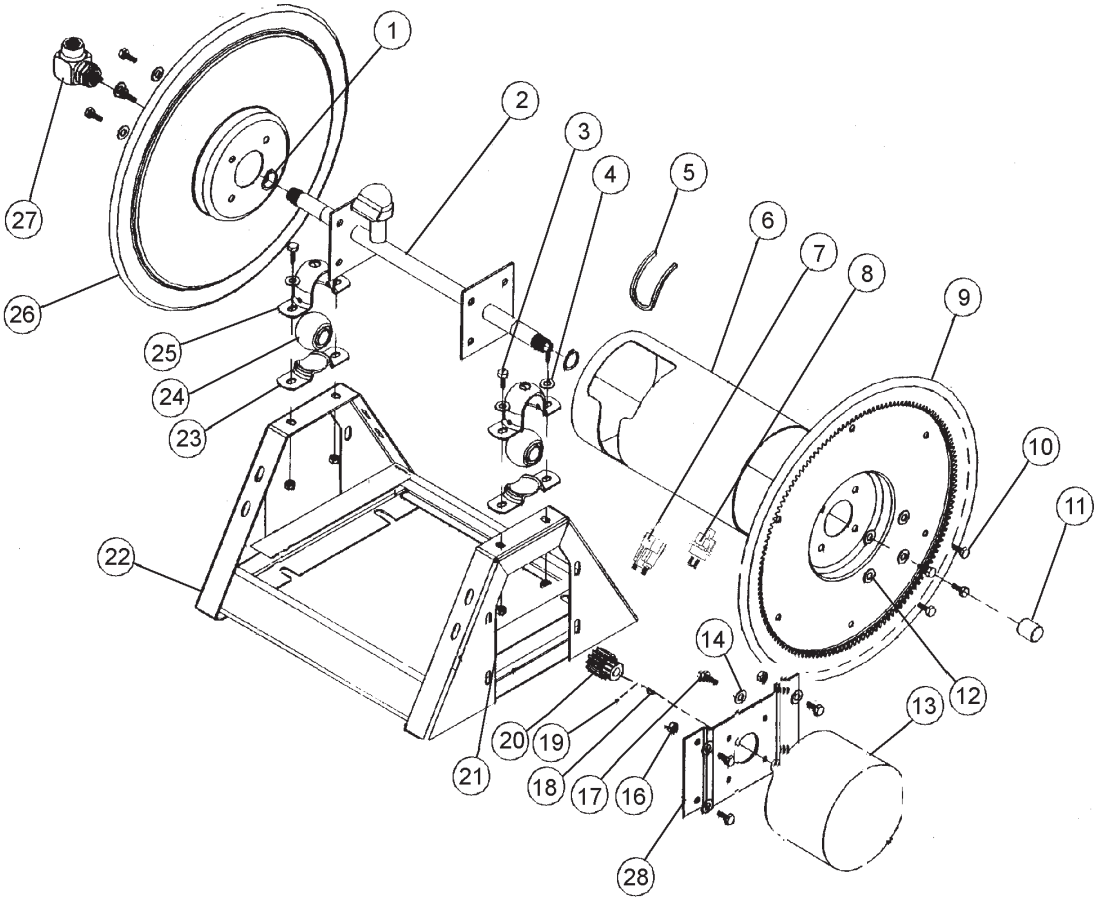

30-501 ELECTRIC HOSE REEL PARTS LIST

REF#	PART#	DESCRIPTION	QUANTITY
1	16-906-25	Retaining Ring	2
2	16-906-22	Axle Assembly	1
3	HB-38-16-100	Hex Bolt, $^3/_8$ - 16 x 1	4
4	HW-38	Flat Washer, $^3/_8$	4
5	16-906-27	Trim, Drum Edge	1
6	16-906-21	Drum Center	1
7	13-750	Solenoid	1
	HB-14-20-075	Hex Bolt, $^1/_4$ - 20 x $^3/_4$	2
	HWL-14	Lock Washer, $^1/_4$	2
	HN-14-20	Hex Nut, $^1/_4$ - 20	2
8	33-251	Switch	1
9	16-906-19	Disc and Gear Assembly	1
10	HB-516-18-075	Hex Bolt, $^5/_{16}$ - 18 x $^3/_4$	8
11	16-906-26	Pipe Cap, $^3/_4$	1
12	HWL-516	Lock Washer, $^5/_{16}$	8
13	16-906-15	Motor 12VDC	1
14	HW-516	Flat Washer, $^5/_{16}$	4
16	HNTL-516-18	Nylon Lock Nut, $^5/_{16}$ - 18	4
17	HB-516-18-100	Hex Bolt, $^5/_{16}$ -18 x 1	4
18	16-906-17	Key	1
19		Set Screw	2
20	16-906-29	Pinion	1
21	HNTL-38-16	Nylon Lock Nut, $^3/_8$ - 16	4
22	16-906-18	Frame Assembly	1
23	16-906-08	Mounting Pillow Block (Bottom)	2
24	16-906-24	Bearing	2
25	16-906-07	Mounting Pillow Block (Top)	2
26	16-906-20	Disc, 17$^1/_2$"	1
27	16-906-23	Swivel Assembly $^3/_4$	1
	16-906-30	Seal Kit (For 16-906-23)	1
28	16-906-28	Bracket 12VDC	1
	16-982	Electric Hose Reel (only)	1

ELECTRIC HOSE REEL WIRING DIAGRAM

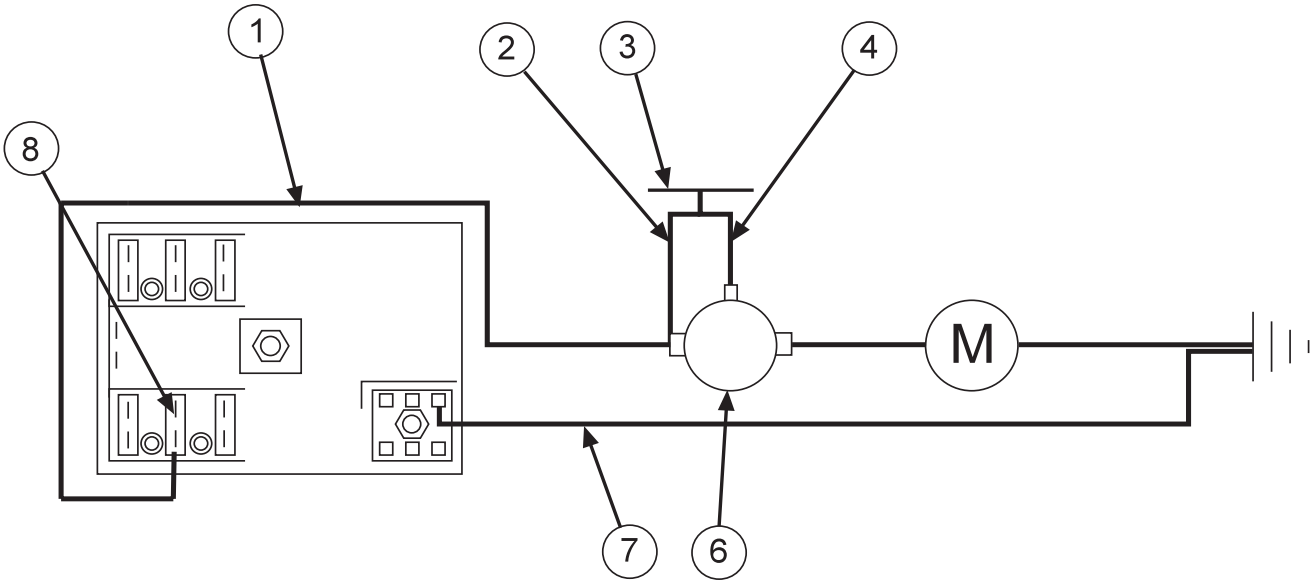

REF#	PART#	DESCRIPTION	QUANTITY
	8843-132	Flex-guard $^{3}/_{8}$ ID	1
1	8919-144	10GA Red Wire 144"	1
	8854	Fork Terminal	1
2	16-979	Wire, Switch to Solenoid Hot Terminal	1
3	33-251	Push Button Switch	1
4	16-978	Wire, Switch to Solenoid Start Terminal	1
6	13-750	Solenoid	1
	SOLENOID TERMINALS		
	HN -516-24	Hex Nut , $^{5}/_{16}$ - 24	2
	HN -10-32	Hex Nut, 10 - 32	1
7	8931-144	10GA White Wire 144"	1
	8854	Fork Terminal	1
8	33-273	Auto Blade Type Fuse 30Amp	1

CONNECTION INSTRUCTIONS

Route wire harness along side of tank and over to fuse block taking care to stay clear of moving parts or hot engine components. Cut off excess wire and strip back $^{3}/_{8}$". Place one 8963 heat shrink ($^{1}/_{4}$ x $1^{1}/_{4}$) on each wire before crimping 8901 slide on connectors to the red and white wires. Connect the two wires to the fuse block first the red to the (+) positive and the white to the (-) negative. Put the 33-273 auto blade type fuse (30 amp) into fuse block.

⚠ WARNING

Make certain you are connecting positive (+) to positive; negative (-) to negative while attaching power leads. If you do not observe polarity, damage will result to electrical components.

Use Dielectric Grease On All Electrical Connections

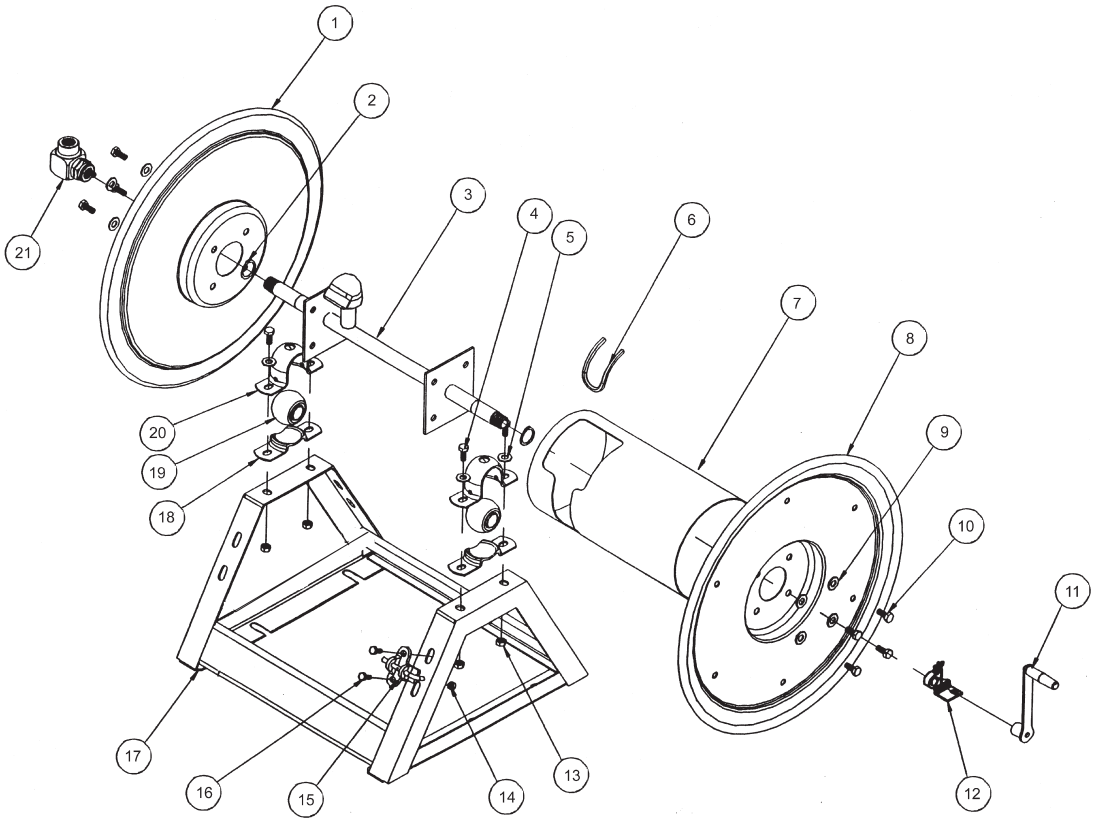

REF#	PART#	DESCRIPTION	QUANTITY
1	16-129-11	Disc, 17 1/2"	1
2	16-906-25	Retaining Ring	2
3	16-906-22	Axle Assembly 3/4	1
4	HB-38-16-100	Hex Bolt, 3/8 - 16 x 1	4
5	HW-38	Flat Washer, 3/8	4
6	16-906-27	Trim, Drum Edge	1
7	16-906-21	Drum Center	1
8	16-906-20	Disc 17 1/2", Crank Side	1
9	HWL-516	Lock Washer, 5/16	8
10	HB-516-18-075	Hex Bolt, 5/16 - 18 x 3/4	8
11	16-129-09	Crank Assembly, 3/4	1
12	16-129-10	Brake Assembly, 3/4	1
13	HNTL-38-16	Nylon Lock Nut, 3/8 - 16	4
14	HNTL-516-18	Nylon Lock Nut, 5/16 - 18	2
15	16-129-08	Lock Pin Assembly	1
16	HB-516-18-075	Hex Bolt, 5/16 - 18 x 3/4	2
	HW-516	Flat Washer, 5/16	2
17	16-129-07	Frame Assembly	1
18	16-906-08	Mounting Pillow Block (Bottom)	2
19	16-906-24	Bearing	2
20	16-906-07	Mounting Pillow Block (Top)	2
21	16-906-23	Swivel Assembly, 3/4	1
	16-906-30	Seal Kit (For 16-906-23)	1

HOSE REEL MOUNT DRAWING

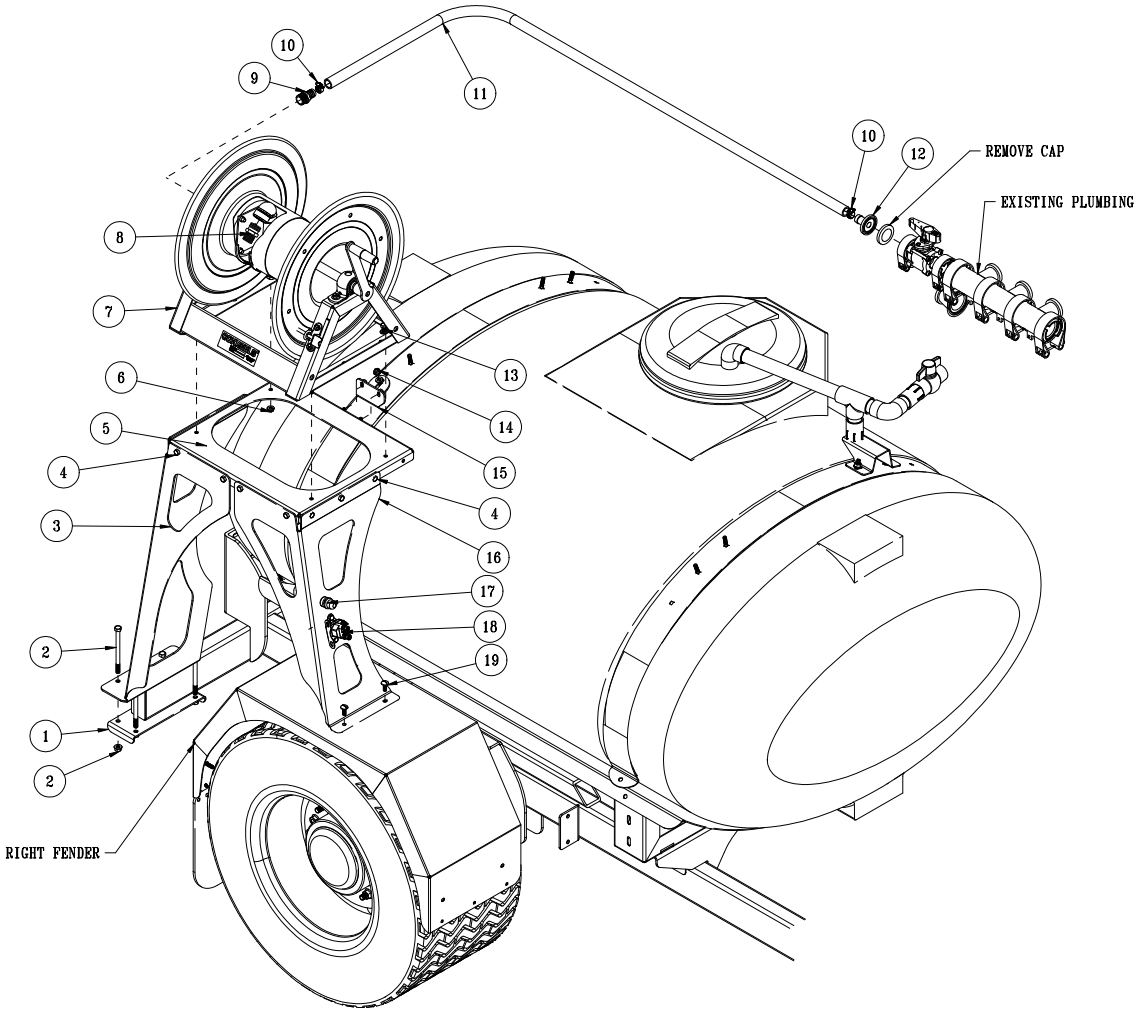

HOSE REEL MOUNT PARTS LIST

REF#	PART#	DESCRIPTION	QUANTITY
1	30-526	Frame Clamp	1
2	HB-38-16-500	Hex Bolt, 3/8 - 16 x 5	4
	HNFL-38-16	Flange Whiz-loc Nut, 3/8 - 16	4
3	30-524	Rear Leg	1
4	HB-516-18-075	Hex Bolt, 5/16 - 18 x 3/4	10
5	31-315	Top Plate	1
6	HNFL-516-18	Nylon Lock Nut, 5/16 - 18	16
7	16-982	Electric Hose Reel	1
	16-129	Manual Hose Reel	1
8	16-295	Hose Fitting	1
9	18-249	Brass Fitting, 3/4 MPT x 3/4 HB	1
10	18-040	Hose Clamp	2
11	9032	¾" Black Hose	111"
12	15-749	#50 - ¾ Hose Barb	1
13	HB-516-18-075	Hex Bolt, 5/16 - 18 x 3/4	6
	HW-516	Flat Washer, 5/16	6
14	HNFL-516-18	Nylon Lock Nut, 5/16 - 18	1
	HW-516	Flat Washer, 5/16	1
15	30-525	Top Brace	1
16	30-523	Front Leg	1
17	33-251	Switch	1
18	13-750	Solenoid w/ Connector	1
	HB-14-20-075	Hex Bolt, ¼ - 20 x ¾	2
	HWL-14	Lockwasher, ¼	2
	HN-14-20	Hex Nut, ¼ - 20	2
19	HSTP-516-18-100	Truss Head Screw	2
	HNFL-516-18	Nylon Lock Nut, 5/16 - 18	2

INSTALLATION INSTRUCTIONS

1. Wear protective clothing when draining the tank and taking apart the lines.
2. Drain tank and spray system in a safe and approved method ensuring that no chemical or water remain in tank as you will be taking apart lines.
3. Remove key from ignition, set park brake and block wheels.
4. Assemble the front leg, rear leg and top plate(Ref 3,5 and16).Use 5/16 bolts and flange whiz-loc nuts(Ref 4 and 6).
5. Install mount assembly onto the right rear fender with two truss head screws and nuts(Ref 17). Leave loose to reposition. Use the frame clamp(Ref 1) to secure rear leg to rear mainframe. Use 3/8 bolts and nuts(Ref 2).
6. Place top brace(Ref 15) on tank strap bolt, secure with hardware(Ref14). Secure top brace to top plate using hardware(Ref 13 and 6).
7. Position hose reel on top mount. Use four 5/16 bolts, washers and nuts(Ref 13 and 6) to hold in place. Tighten bolts.
8. Tighten mount bolts on fender(Ref 17).
9. Put 18-249 barb fitting(Ref 9) into hose reel end and 16-295 hose fitting(Ref 8) into center of hose reel.
10. On the left side of the machine is the plumbing for the spray system. At the end of the ball valve there is a cap. Loosen clamp and remove cap. Place #50 barb(Ref 12) where the cap was and tighten clamp.
11. Route the 3/4" hose from the hose barb you just installed on the plumbing to the hose barb on the end of the hose reel. Secure with an 18-40 hose clamp. Secure hose to machine with 22-075 nylon ties.

30-503 FOAM MARKER DRAWING

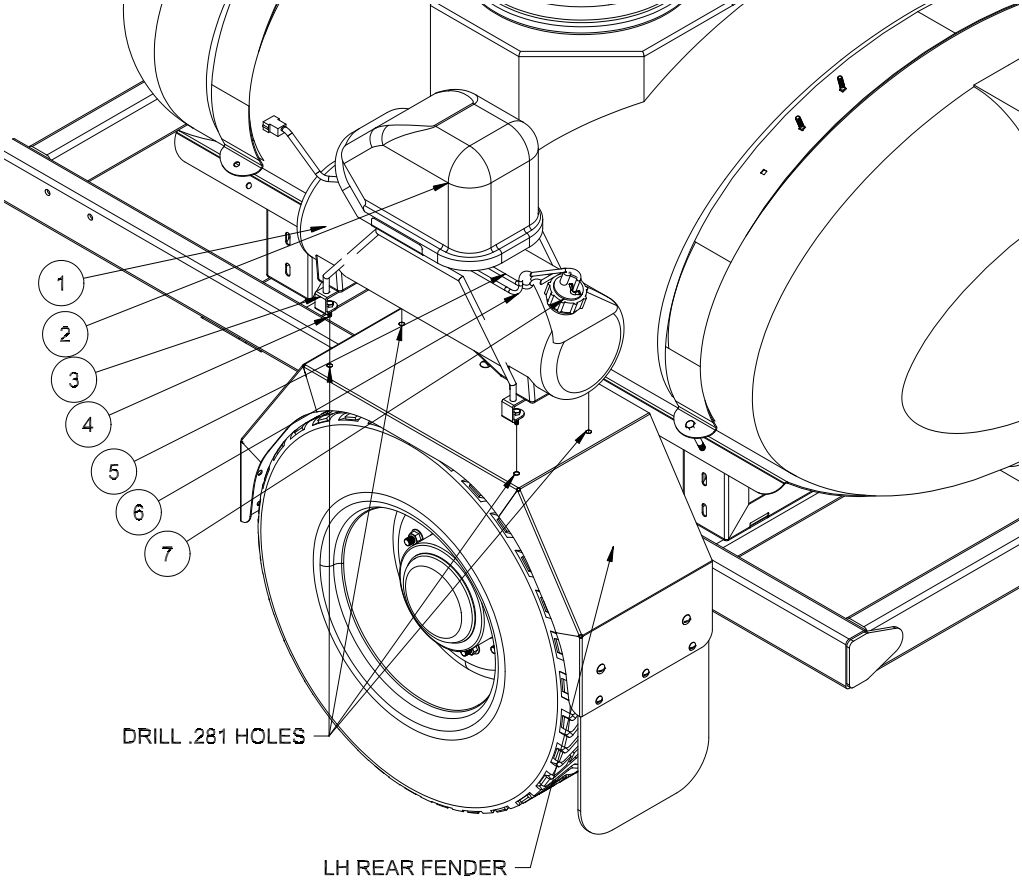

REF#	PART#	DESCRIPTION	QUANTITY
1	14-291-02	Foamer Tank	1
2	14-291-03	Compressor Only	1
	14-291-01	Black Cover	1
3	14-291-04	Tank Bracket	2
4	HB-14-20-075	Hex Bolt, $^1/_4$ - 20 x $^3/_4$	4
	HNFL-14-20	Flange Whiz-loc Nut, $^1/_4$ - 20	4
5		Blue Tube	1
6		Clear Tube	1
7	14-284-02	Cap Assembly	1
	14-291	Foamer (includes items 1-7)	1

TANK MOUNT

1. Position the complete foamer tank assembly on the rear left fender.
2. Mark the tank bracket holes onto the rear fender.
3. Being careful not to hit the tire, drill the 4 marked holes into the rear fender.
4. Place Foamer unit(Refs 1-7) onto the rear fender. Using the $^1/_4$ x $^3/_4$ Bolts and $^1/_4$ Flange Lock Nuts fasten Foamer to fender. Tighten hardware.

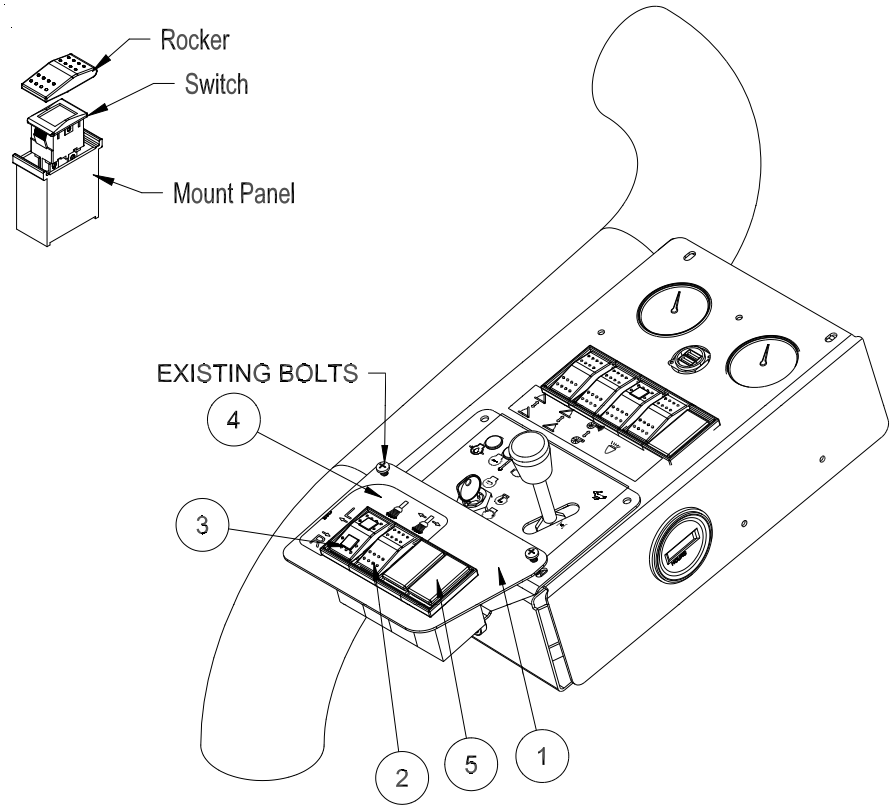

REF#	PART#	DESCRIPTION	QUANTITY
1	10-739	Switch Mount Plate	1
	15-725	Panel Mount End	2
	15-729	Panel Mount Center	2
2	15-782	Switch, Unlit	1
	15-727	Rocker, No Light	1
3	15-918	Switch, 2 Red LED	1
	15-917	Rocker, 2 Red Lenses	1
4	30-374	Decal, Foamer	1
5	15-730	Switch Blank	2

⚠ WARNING **Safety: Before working on machine: stop engine, set park brake, remove key from ignition and block wheels. Disconnect negative (-) battery terminal.**

1. Place decal(Ref 4) on Switch mount plate. Place panel mount ends and panel mount centers in mount plate.
2. Mount switches(Ref 2 & 3) to switch mount plate(Ref 1) as shown above. Place the blanks(Ref 5) into the empty spots. Mount the switch mount plate(Ref 1) on the side control panel using existing bolts.

FOAMER NOZZLE MOUNT & HOSE GUARD MOUNT DRAWING

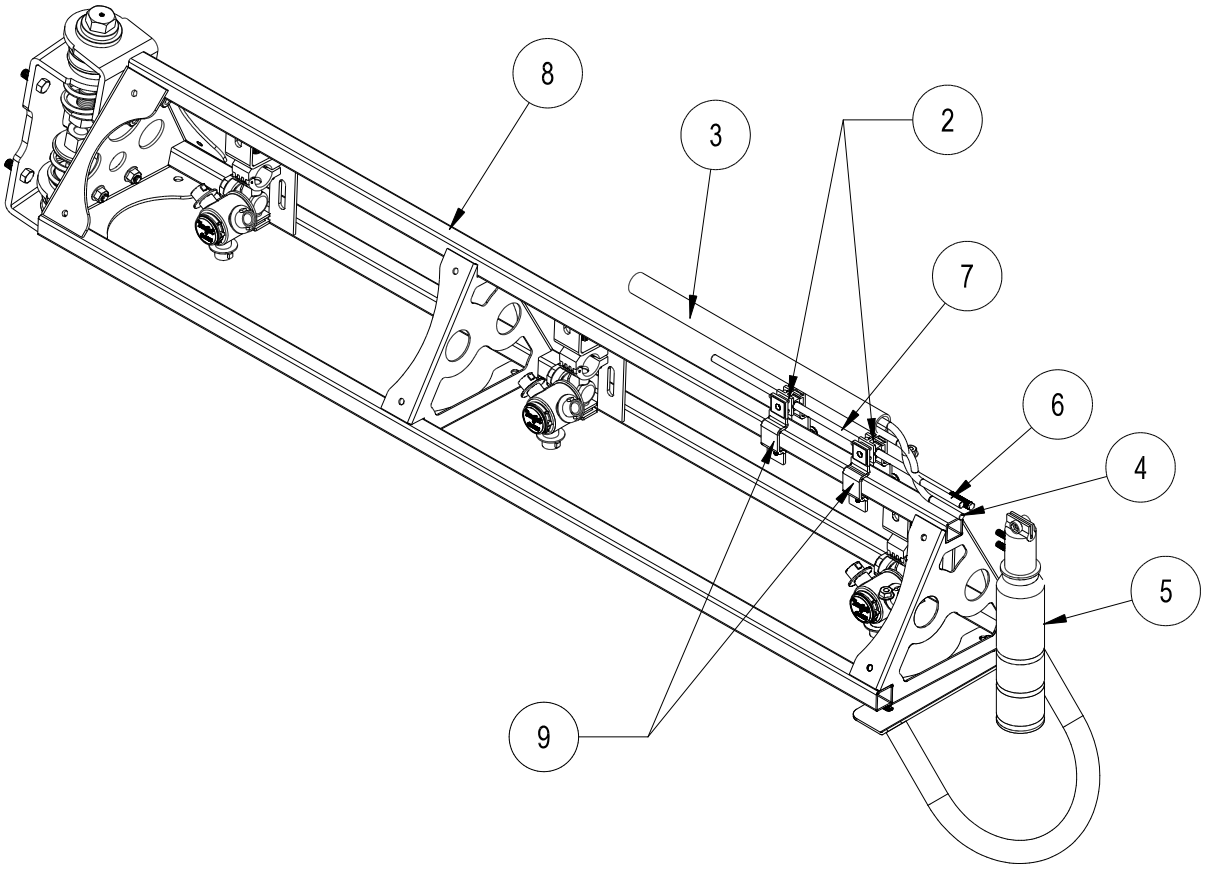

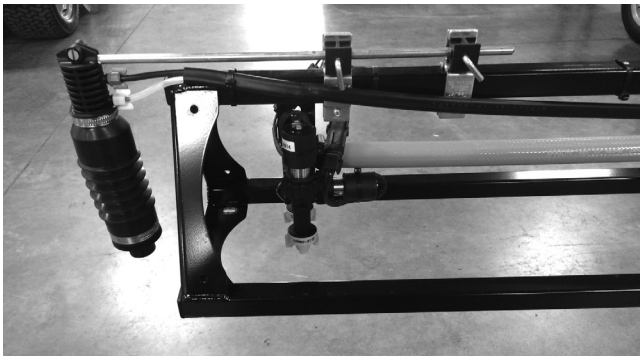

30-503 FOAM MARKER PARTS LIST

REF#	PART#	DESCRIPTION	QUANTITY
2	16-987	Foam Nozzle Mounting Kit	1 per boom
3	15-507	Foamer Tubing	2
4		Clear Tubing	
5	15-511	Foam Nozzle	2
6		Blue Tubing	
7	15-510-01	Nozzle Mounting Rod	2
8		Boom	
9	16-795	Square Clamp	4

INSTALLATION INSTRUCTIONS

1. Slide hose clamp onto drop tube of foam nozzle and attach restricter bell.
2. Place splined end of Nozzle mounting rod (Ref 7) into top of foam nozzle (Ref 5). Tighten screw.
3. Slide two foam nozzle mounts (Ref 2) onto the rod. Place square clamps (Ref 9) on foam nozzle mounts and mount the square clamps to the boom (Ref 8). Adjust foam nozzle mounts and clamps so nozzle assembly will clear end of boom. Tighten foam nozzle mounts and square clamps to prevent side to side movement. Do the same to the other side.
4. Being careful not to cut the tubing (Ref 3), cut the oversleeve back approximately 2" (5 cm) to expose blue (Ref 6) and clear tubing (Ref 4).
5. Remove blue wing nut from top connector of foam nozzle and slide it on the blue tube with the threads facing toward end of tube. Slide blue tube all the way over the top of the small tube on foam nozzle. Slide wing nut back to the threads and hand tighten. Follow the same steps for the clear tube and tube nut.
6. Route the tubing along underside of main frame using tie downs as necessary.
7. Install opposite ends of air-liquid tubes to compressor, again cutting back the oversleeve approximately 2" (5 cm) and inserting blue and clear tubes for the left boom section into the tubing connectors (Ref A) on the right side of compressor as far as possible.
8. Follow the same steps for the right boom tubing. Notice the right boom is inserted into left side of compressor. To release tubing from compressor, hold black ring around tubing, and pull tube out.
9. Hose's must be routed on bottom of the boom square tubing.
10. Install hose guard using 2 drill screws (you may want to drill a $^{3}/_{16}$ pilot hole first).
11. Place another hose guard against first and install in same manner.
12. Repeat process for other boom side.
13. Connect small plastic electrical plug under compressor to electrical extension cable.
14. Cut cable and strip casing, allowing enough length to connect to fuse block.
15. Strip and connect slide on connectors to each wire and use the heat shrink.
16. Connect black negative (-) wire to the ground and connect red wire to the positive (+).
17. Insert 10 amp fuse into slot which red wire was attached to.

14-291 FOAMER REPLACEMENT PARTS

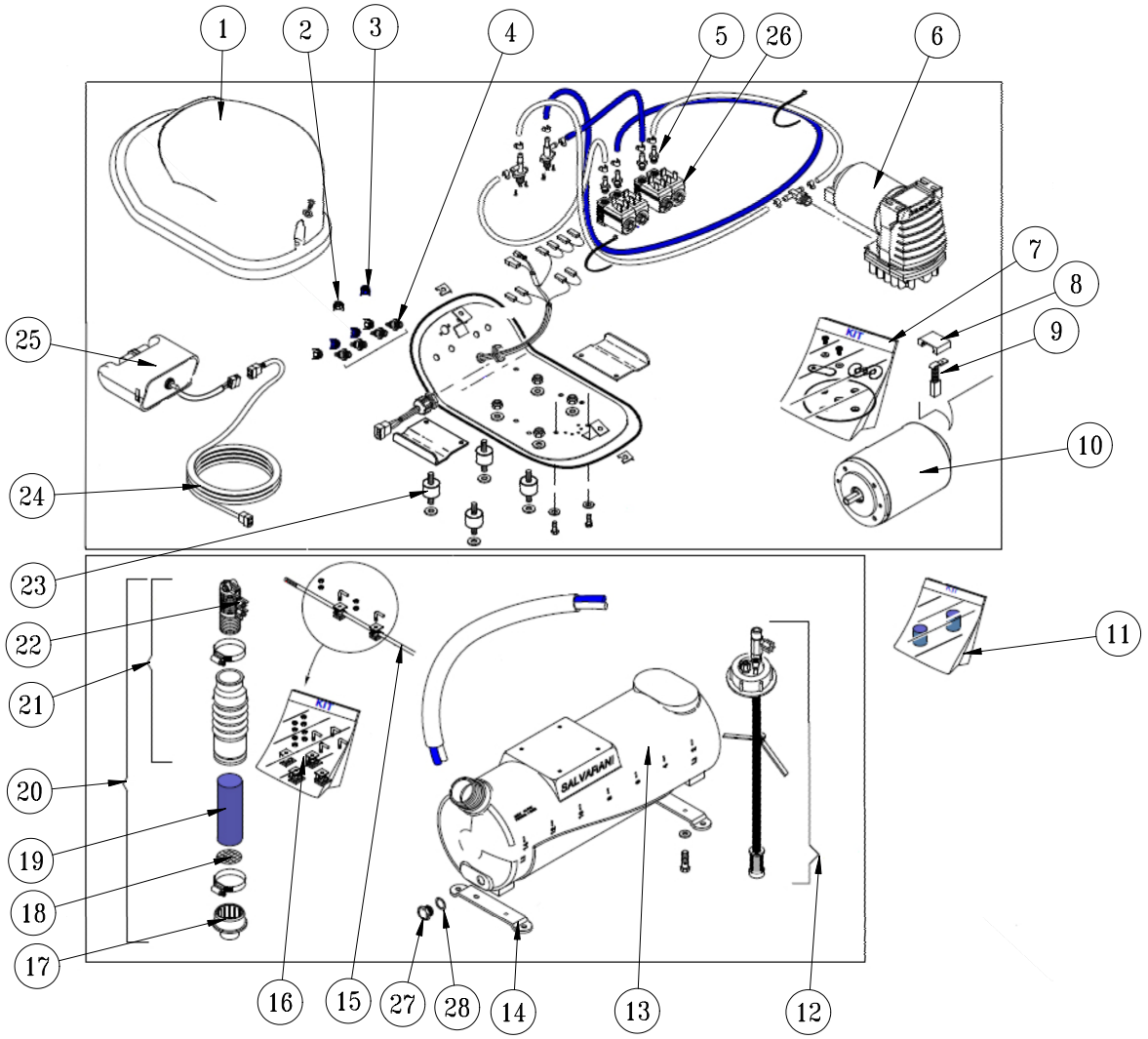

Accessories

14-291 FOAMER REPLACEMENT PARTS

REF#	PART#	DESCRIPTION	QUANTITY
1	14-291-01	Black Cover	1
2	14-291-08	White Fly Nut	1
3	14-291-09	Blue Fly Nut	1
4	14-284-10	Tubing Connector	1
5	14-291-17	M6 Tubing Connector	1
6	14-536	Compressor Complete	1
7	14-291-11	Diaphragm Replacement Kit	1
8	15-505-08	Brush Retainer	1
9	15-505-06	Brush	1
10	15-505-07	12V Electric Motor	1
11	15-511-02	Foam Sponge	1
12	14-284-02	Cap Assembly	1
13	14-291-02	Foamer Tank	1
14	14-291-04	Tank Brackets	2
15	15-510-01	Nozzle Mounting Rod	2
16	16-987	Foam Nozzle Mounting Kit	1
17	14-284-09	Foam Nozzle Reducer	2
18	15-511-09	Stainless Steel Screen	2
19	15-511-08	Long Foam Sponge	2
20	15-511	Foam Nozzle	2
21	15-511-07	Foam Nozzle Assembly	1
22	15-511-01	Foam Nozzle Sub Assembly	1
23	14-291-15	Shock Absorber	4
24	14-284-05	Extension Wire	1
25	14-291-05	Switch Box	1
	15-506-02	Switch	1
26	14-284-11	Solenoid Valve	4
27	14-291-19	Drain Plug	1
28	14-291-18	Drain Plug Seal	1
NS	15-507	Foamer Tubing	1

FOAMER FLOW REGULATOR VALVE

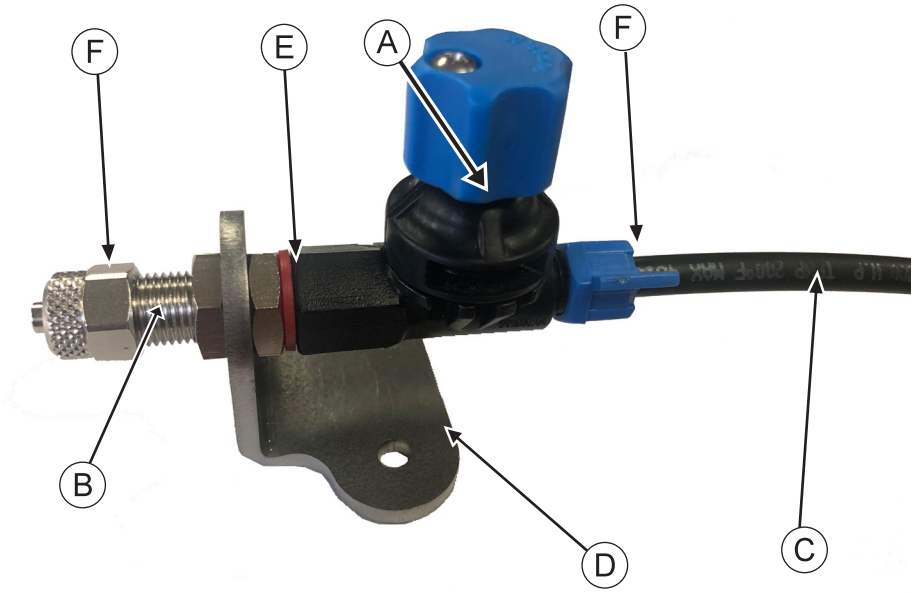

REF#	PART#	DESCRIPTION	QUANTITY
A	14-284-13	Flow Regulating Valve	1
B	14-699	Male Coupling	1
C	15-507	Tubing	1
D	20-769	Regulating Valve Bracket	1
E	14-702	Red Washer	1
F	14-291-09	Replacement Blue Wing Nut	1

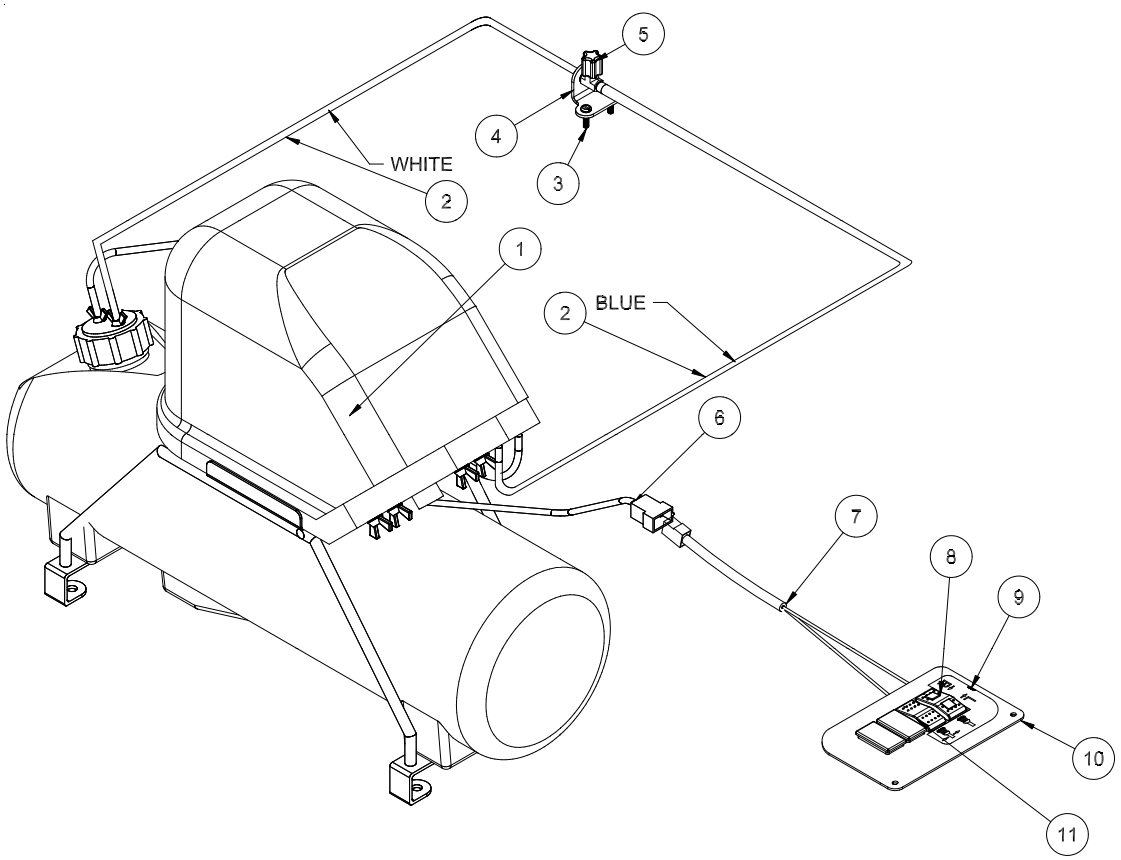

REF#	PART#	DESCRIPTION	QUANTITY
1	14-291-03	Compressor	1
2	15-507	Tubing -Blue and white	1
3	HSM-10-32-075	Machine Screw, #10-32 x 3/4	2
	HNFL-10-32	Flange Whiz-loc Nut, #10-32	2
4	20-769	Mount Bracket	1
5	14-699	Male Coupler	1
	14-291-09	Blue Fly Nut	1
	14-702	Red Washer	1
6	15-504-04	Foam Marker Wiring Harness	1
7	32-574	Foamer Wire Harness	1
8	15-918	Switch, 2 Red LED	1
	15-917	Rocker, 2 Red Lenses	1
9	30-374	Decal, Foamer	1
10	10-739	Switch Mount Plate	1
11	15-782	Switch, Unlit	1
	15-727	Rocker, No Light	1

INSTALLATION

1. Connect the compressor wire harness (Ref 6) to the switches using the wire harness (Ref 7).
2. Use dielectric grease on all electrical connections. Route the wire harness to the battery and out of the way of any heat or moving parts. Use nylon ties as needed. Connect the wire harness to the battery. Red to positive(+), black to negative(-).

30-510 WATER METER KIT

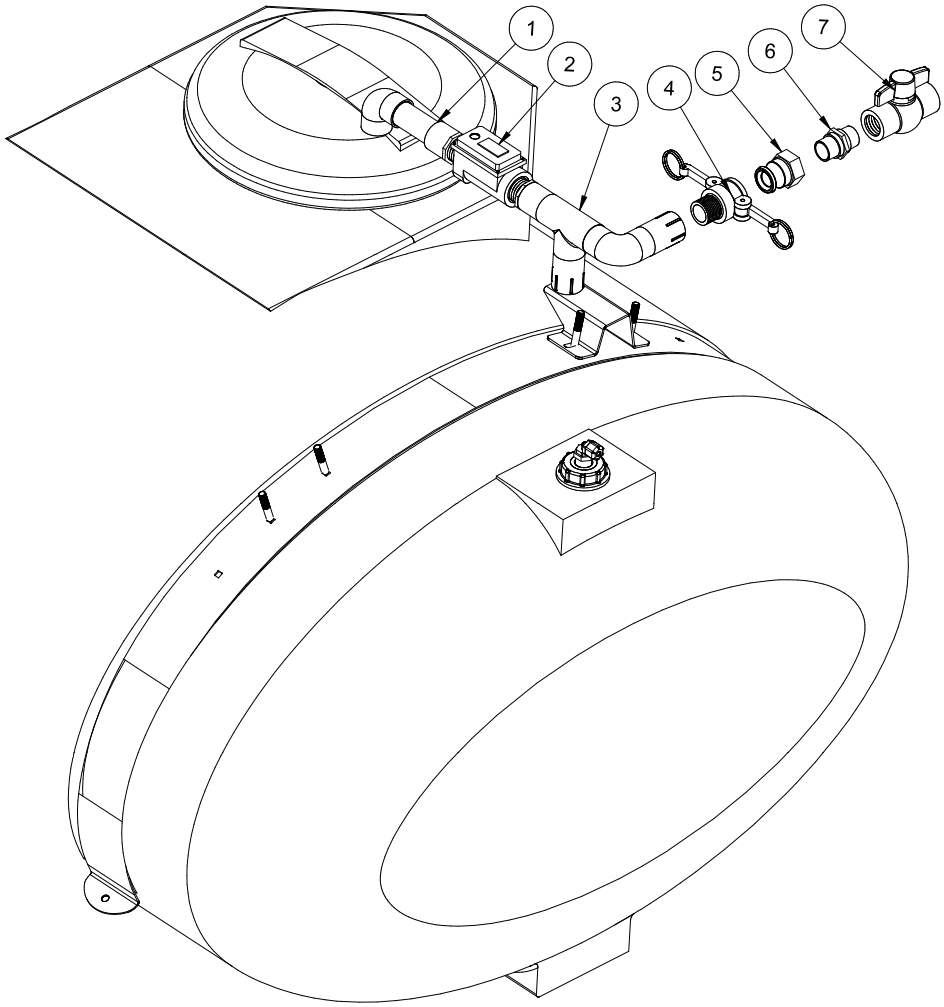

REF #	PART #	DESCRIPTION	QUANTITY
1	20-814	Filler Outlet	1
2	14-804	Water Meter	1
3	30-580	Filler Outlet	1
4	16-962	1"Quick Coupler (already on machine)	1
5	16-961	1" Adapter Quick Coupler (already on machine)	1
6	18-654	Close Nipple (already on machine)	1
7	18-448	1" Ball Valve (already on machine)	1

1. Thoroughly flush the service line upstream of the meter to remove dirt and debris.
2. The DLJ Meter is for use **only** with **COLD WATER** up to 122°F (50°C)
3. Slowly open any upstream valves to prevent damage to the meter.

Gallons to Cubic feet Conversion :

Multiply gallons reading by 0.1337 to get cubic feet.

There are 7.48052 gallon per cubic foot.

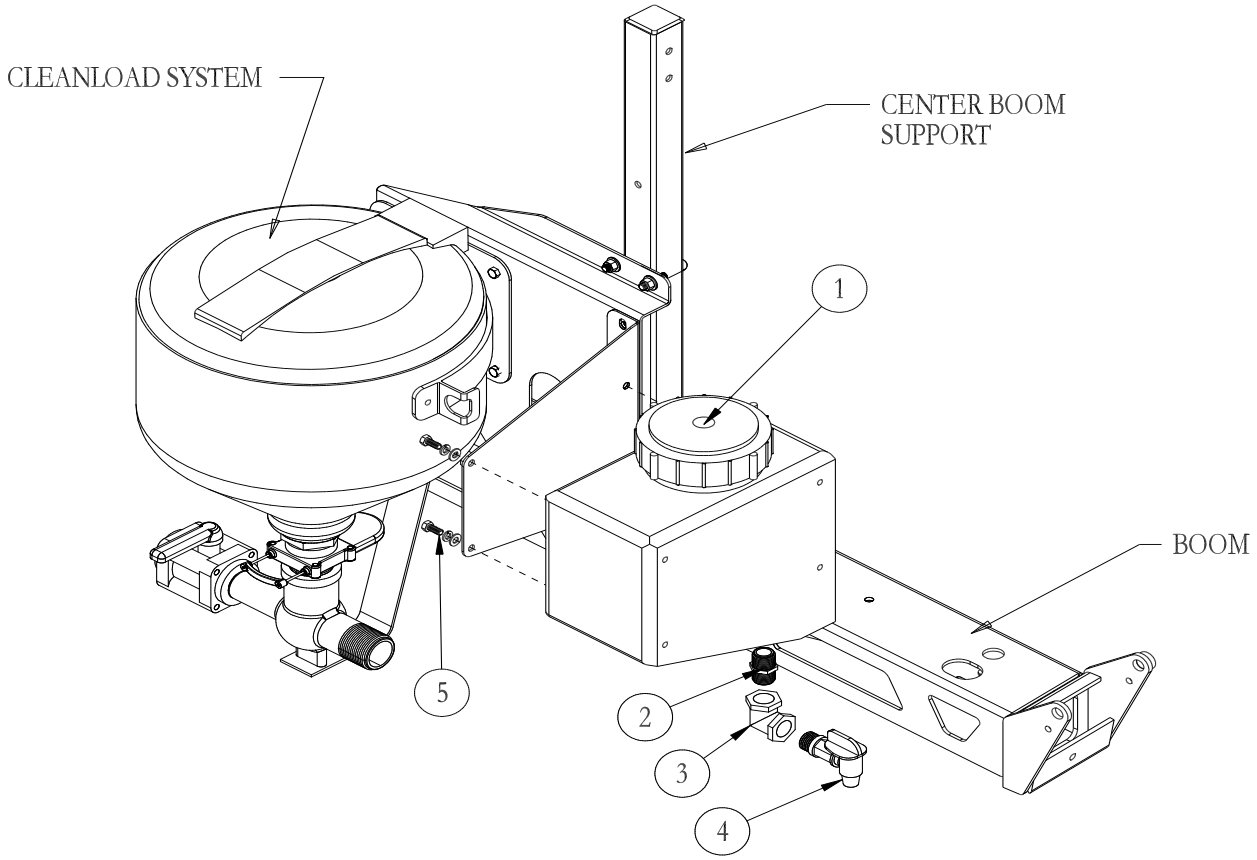

REF#	PART#	DESCRIPTION	QUANTITY
1	10-234	Wash Tank	1
2	16-158	Close Nipple	1
3	16-151	Elbow	1
4	16-960	Spigot	1
5	HB-516-18-075	Hex Bolt, $^5/_{16}$ - 18 x $^3/_4$	4
	HWL-516	Lock Washer, $^5/_{16}$	4
	HW-516	Flat Washer, $^5/_{16}$	4

1. Fresh Water Wash Tank mounts on the rear of all the machines.
2. The Bracket is already attached to the Super Boom center boom post.
3. Install the nipple (Ref 2), elbow (Ref 3) and spigot (Ref 4)into the bottom of wash tank (Ref 1). Use thread tape on all threads.
4. Mount the tank onto the mount bracket using four $^5/_{16}$ x $^3/_4$ Hex Bolts, washers and lock washers. Tighten.
5. Rinse tank with clear water and check for leaks around fittings.

⚠ WARNING **This tank is for fresh clear water ONLY. Do not put chemicals in this tank.**

15-835 TANK RINSING SYSTEM

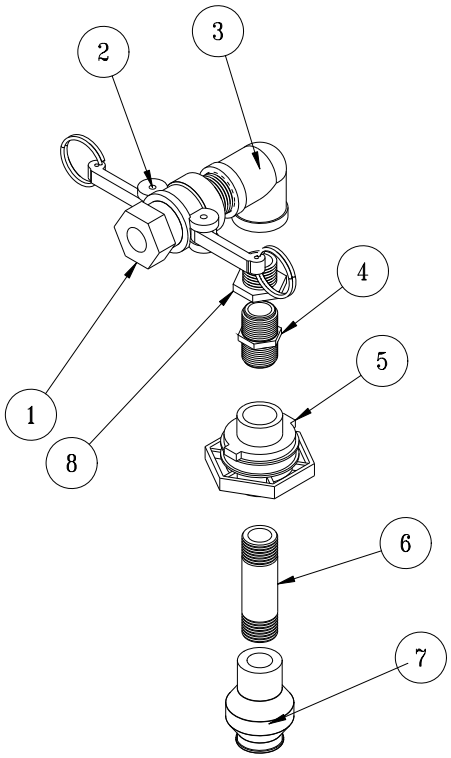

REF#	PART#	DESCRIPTION	QUANTITY
1	16-961	1" Adapter	1
2	16-962	1" Coupler	1
3	16-864	1" FTP Elbow	1
4	16-158	Close Nipple	1
5	16-150	Double Thread Fitting	1
6	16-172	4" Nipple	1
7	15-834	Tank Rinsing Nozzle	1
8	16-163	Reducer Bushing	1

Drill 1-3/4" hole 5" from outside edge of cover.
Install Tank Rinsing kit as shown, with the Double Thread Fitting (Ref 5) going into the cover.

Basket Must be removed During Use.

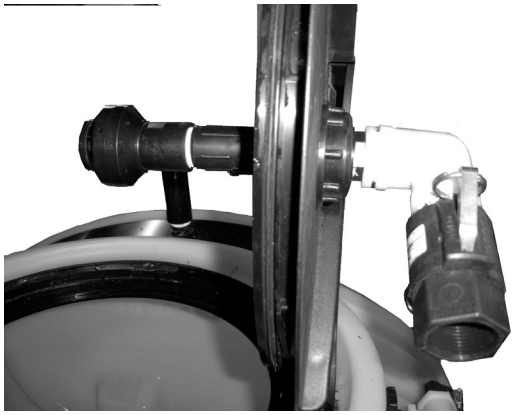

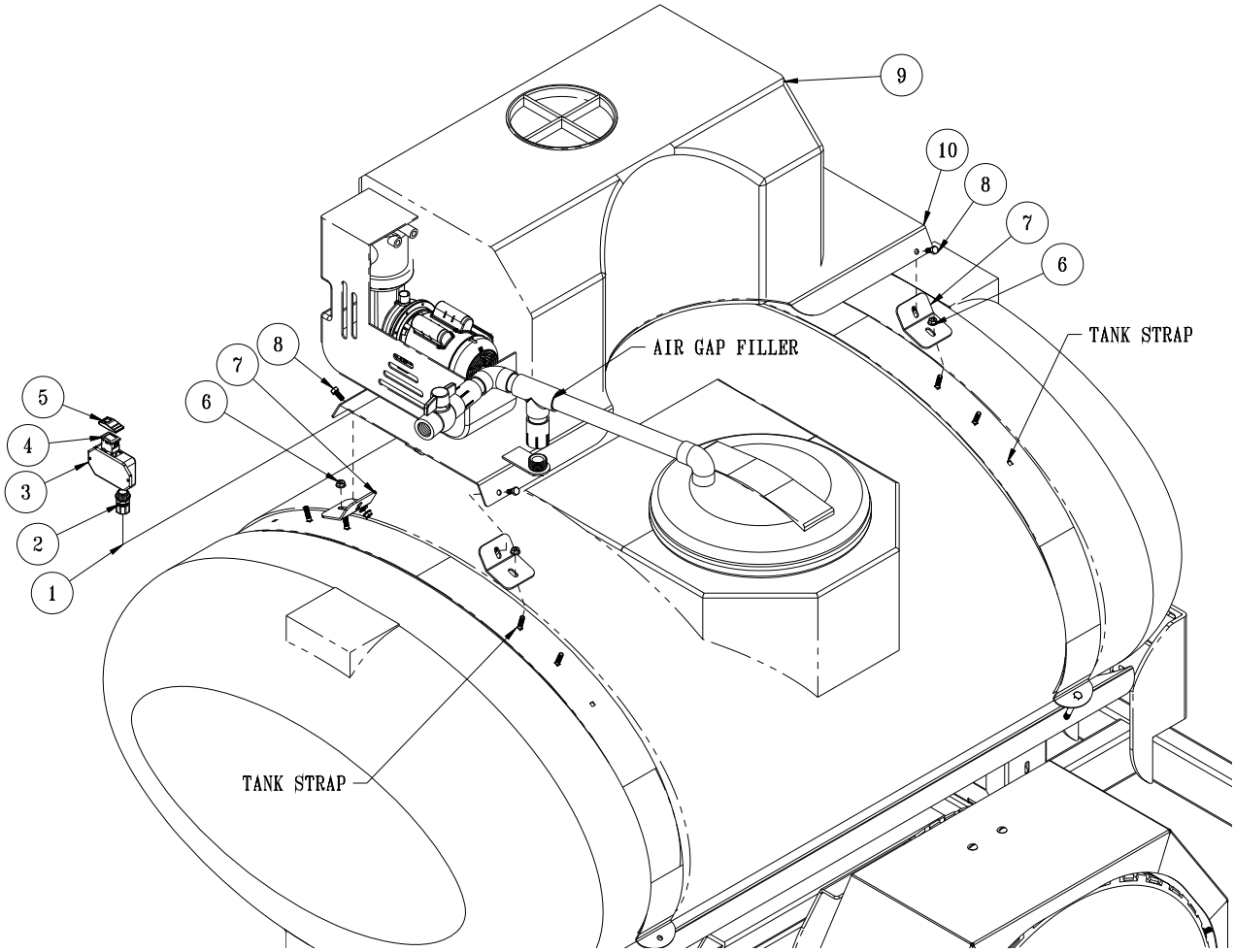

REF#	PART#	DESCRIPTION	QUANTITY
1	30-389	Wire Harness	1
2	18-445	Cord Connector	1
3	30-391	Switch Box	1
4	15-726	Lighted Switch	1
5	15-731	Amber Rocker	1
6	HNFL-516-18	Flange Whiz-Loc Nut, $^{5}/_{16}$-18	8
7	30-573	Mount Leg	4
8	HSTP-516-18-075	Phillips Machine Screw, $^{5}/_{16}$ -18 x $^{3}/_{4}$	4
	HW-516	Flat Washer, $^{5}/_{16}$	4
9	30-349	26 Gallon Wash Tank w/ Electric Motor	1
	HSTP-516-18-075	Phillips Machine Screw, $^{5}/_{16}$ -18 x $^{3}/_{4}$	4
	HNFL-516-18	Flange Whiz-Loc Nut, $^{5}/_{16}$-18	4
10	30-572	Rinse Tank Mount	2

The air gap filler and mount will need to be removed before installing the rinse tank. The rinsing system can be placed on any flat surface on the top of the spray tank as long as the hose from the 26 gallon spray tank will reach the elbow in the bulkhead. 1-5/8 " hole saw will be needed.

30-515CHEMICAL CLEAN-LOAD DRAWING

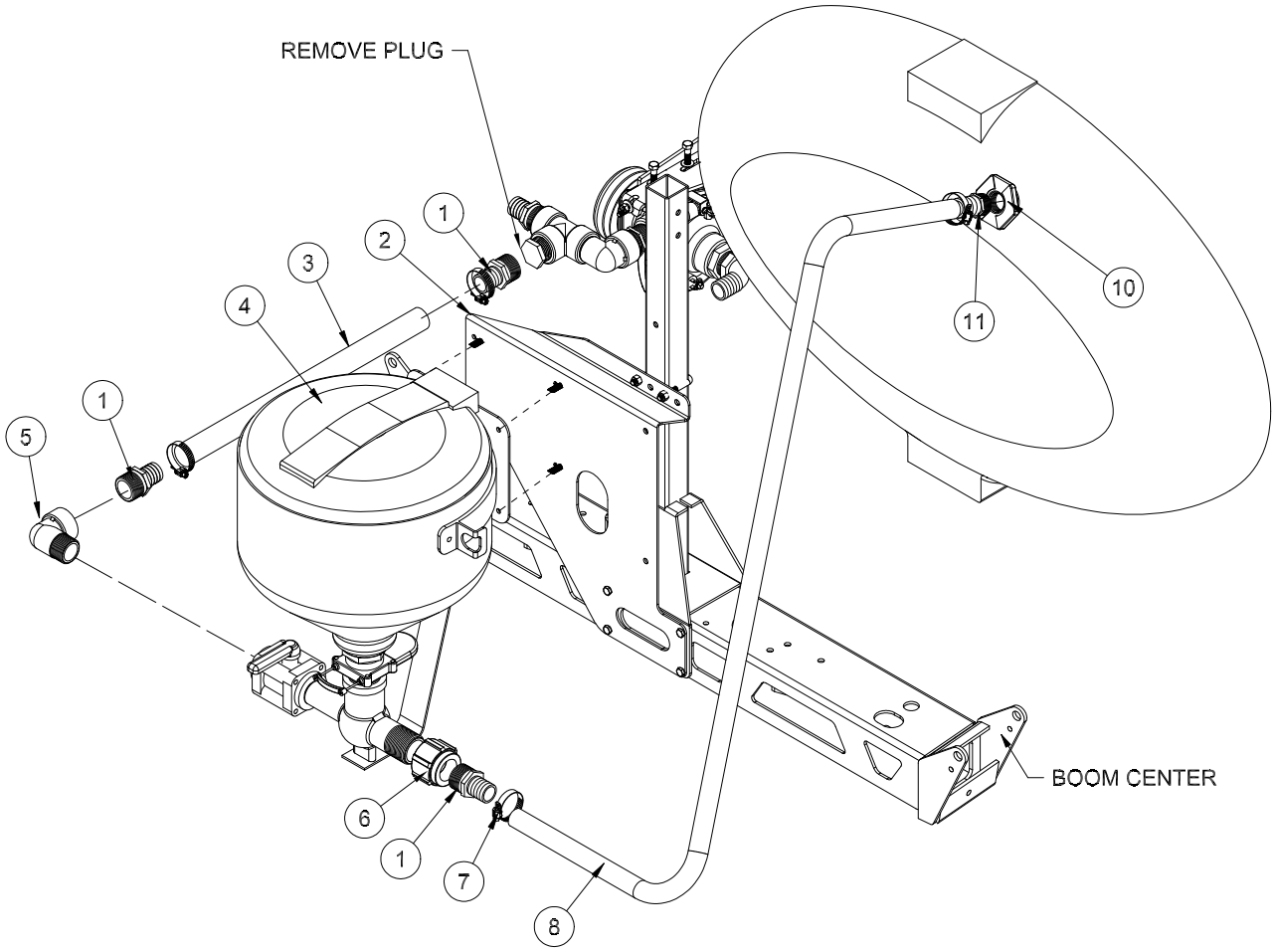

REF#	PART #	DESCRIPTION	QUANTITY
1	16-161	Fittin, 1¼ MPT x 1¼ HB	3
2	17-660	Clean Load Mount (part of boom)	1
3	8897	1¼" Discharge Hose	90"
4	15-620	Cleanload Assembly	1
	HBFL-516-18-075	Flange Bolt 5/16 - 18 x 3/4	4
	HNFL-516-18	Lock Nut 5/16 - 18	4
5	16-972	90° Elbow	1
6	18-391	Coupling	1
7	18-116	Hose Clamp	4
8	8897	1¼" Discharge Hose	50"
9	16-159	Hose Barb	1
10	16-945	Fitting (part of tank)	1

START-UP

1. All Clean-load valves must be closed prior to starting: inlet ball valve, knife valve and hopper rinse ball valve.
2. Open lid to check for foreign objects which may hinder performance or contaminate the system.
3. Close and lock lid by turning cover clockwise.
4. Divert pump flow to Clean-load inlet line. A pressure of 30 PSI minimum and 150 PSI maximum must be used. Highest pressures increase eduction rate and available wand suction.
5. Turn inlet ball valve on (yellow handle).
6. Open knife valve, located on the bottom of hopper, by pushing handle in (red handle).
7. Unlock and open lid slowly by turning cover counterclockwise.

LOADING LIQUID OR POWDERED CHEMICAL INTO HOPPER

8. Pour required amount of chemical into hopper. Avoid splashing liquids or powdered chemicals outside of hopper.
9. Rinse empty chemical containers if applicable. Place container opening over container rinse valve and press down. This will activate the rinse valve and rinse container.
10. Rinse Clean-load hopper. Close and lock lid by turning cover clockwise. Release the safety locking band on the hopper rinse ball valve and turn on for 20 seconds. Close ball valve and return locking band to locked position.
11. Open lid and inspect for chemical residue. Repeat step 10 as necessary.
12. Close knife valve by pulling red handle out towards you. Turn inlet (yellow handle) off.

LOADING LIQUID AND/OR POWDERED CHEMICAL WITH SUCTION LANCE

Note: Lance suction is dependent upon eductor pressure and flow. For best results, use highest pressure available up to 150 PSI maximum.

8. Insert lance body with o-ring into eductor until the o-ring is sealed.
9. Use the free end of the lance to pierce bag or container to vacuum powdered or liquid chemical.
10. Rinse lance. Place lance end into a clean container of water to rinse lance assembly.
11. Remove lance body from eductor and drain any remaining fluid into hopper.
12. Close knife valve (red handle). Turn inlet valve (yellow handle) off.

SHUTDOWN

1. Ensure that:
   - All valves are closed. Be sure to close knife valve first. (Close by pulling red handle out towards you.)
   - Chemical residue has been cleaned.
   - Hopper lid is closed and locked by turning cover clockwise.
2. Divert pump flow back to normal operation.

Symptom	Corrective Action
Low eduction rate	Check pump pressure and flow. Cleanload Eductor performance is based on flow and pressure to the system. Note requirements for high eduction rates. Increase outlet hose size back to tank.
Plugged or clogged bottle rinse nozzle	Disassemble rotary portion of nozzle from lower valve assembly and back flush until nozzle ports are clear of debris.
Plugged or clogged tank rinse nozzle	Disassemble rotary portion of nozzle from NPT hose barb and back flush until nozzle ports are clear of debris. Remove screen and flush with water to clear away foreign material.
Fitting leaks	Check for cracks in fitting. Replace fitting if necessary. Disassemble and add more joint seal in compound if leak occurs on threads.

15-620 CHEMICAL CLEAN LOAD® PARTS DRAWING

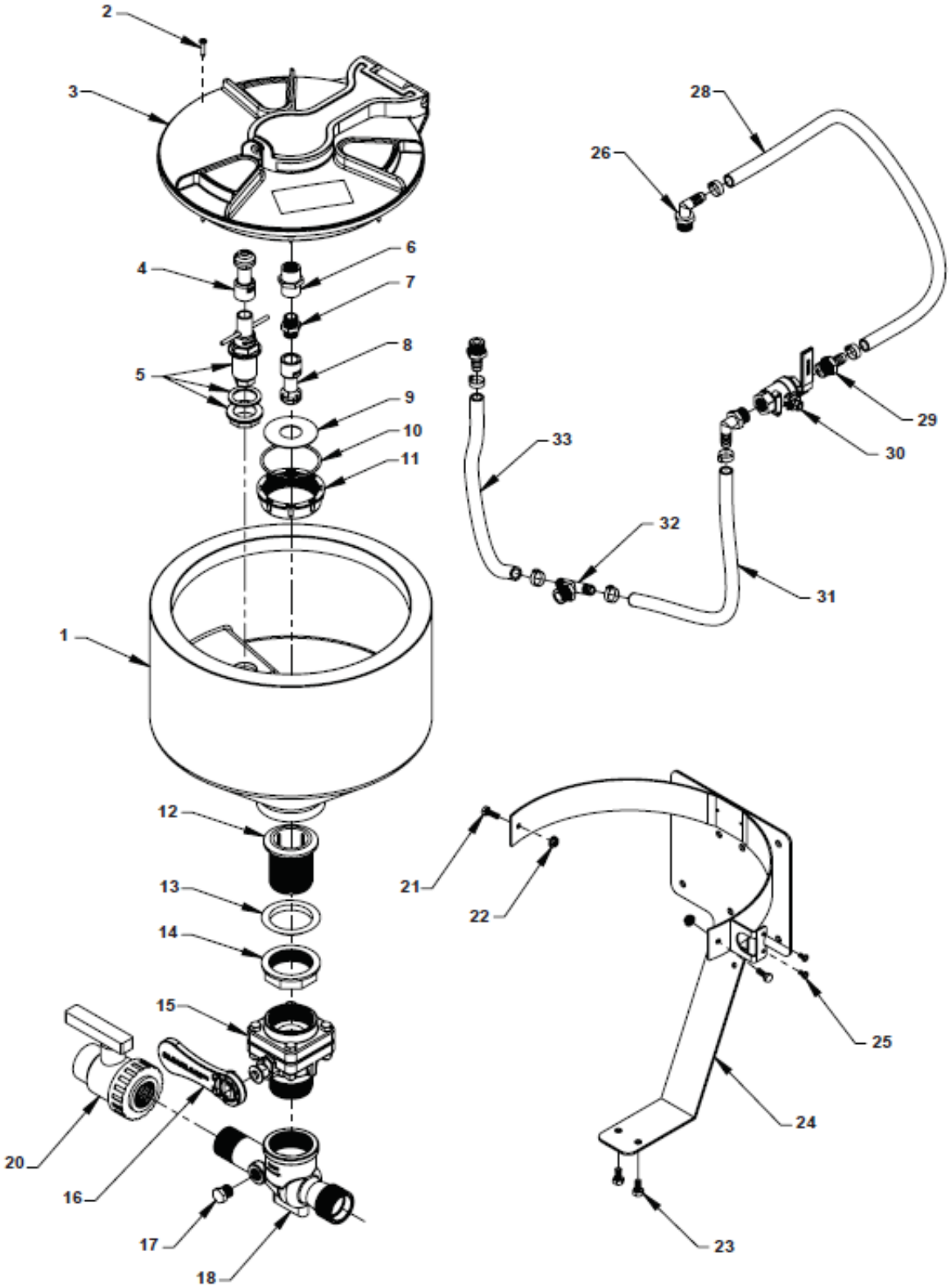

Accessories

15-620 CHEMICAL CLEAN LOAD® PARTS LIST

REF#	PART#	DESCRIPTION	QUANTITY
1	15-620-21	Tank	1
2		Screw, #6 x 1”	8
3	15-620-02	Tank Lid	1
4	15-620-22	ProClean Container Nozzle	1
5	15-620-23	ProClean Push Valve Assembly	1
	15-620-19	Tank Rinse	1
	15-620-20	Gasket, 1”	1
6		1/2 x 1/2 FNPT Coupler	1
7		1/2 x 1/2 Thread Nipple	1
8		ProClean Tank Wash Nozzle	1
9		Splash Retainer	1
10		O-ring Breather	1
11		Nut, Breather	1
12	15-620-18	Drain Head, 2”	1
13	15-620-17	Gasket, 2” Tapered	1
14	15-620-16	Locking Ring, 2”	1
15	15-620-12	Ball Valve	1
	15-620-15	Gasket, 2” BSP	1
16	15-620-13	Handle, Clean-load	1
17		1/2 MNPT PP Hex Plug	1
18	15-620-04	Clean-load Eductor	1
20	15-620-14	Ball Valve, 1 1/4 Single Union	1
21		Screw	2
22		Flange Nut	2
23		Hex Head Screw	2
24	15-620-01	Frame, Back Mount	1
25		Phillips Head Screw	2
26	15-620-11	Elbow 1/2”	2
28	15-620-08	Hose, Tank Rinse, 1/2” EPDM	1
29	15-620-09	HB, 1/2 MNPT x 1/2 HB	2
30	15-620-10	Valve, SS Tank Rinse	1
31	15-620-06	Hose, Valve Feeder, 1/2” EPDM	1
32	15-620-05	HB Tee, 1/2 MNPT to 1/2 HB	1
33	15-620-07	Hose, Bottle Rinse, 1/2” EPDM	1

DECAL LIST

This is a list of decals located on the Spray Star 1300. Part number, description and location will help in reordering decals.

A	15-463	Decal Spray Pump
B	25-370	Decal, 88 dBA
C	15-719	Decal, Speed Control
D	25-277	Decal, Battery Warning
E	25-279	Decal, Safety Warning
F	25-286	Decal, Pinch Point
G	25-298	Decal, Warning Hot
H	25-307	Decal, Fuel Only
I	30-402	Decal, Control Panel
J	25-356	Decal, Tire Pressure 20psi
K	25-373	Decal, Smithco Star
L	25-380	Decal, Tire Pressure 30psi
M	27-077	Decal Smithco
N	27-093	Decal, Hydraulic Oil Level
O	30-403	Decal, Spray Star 1300
P	14-803	Decal, Clean Agitation Line Strainer
Q	25-313	Decal, Warning Grade
R	25-078	Decal, No Riders

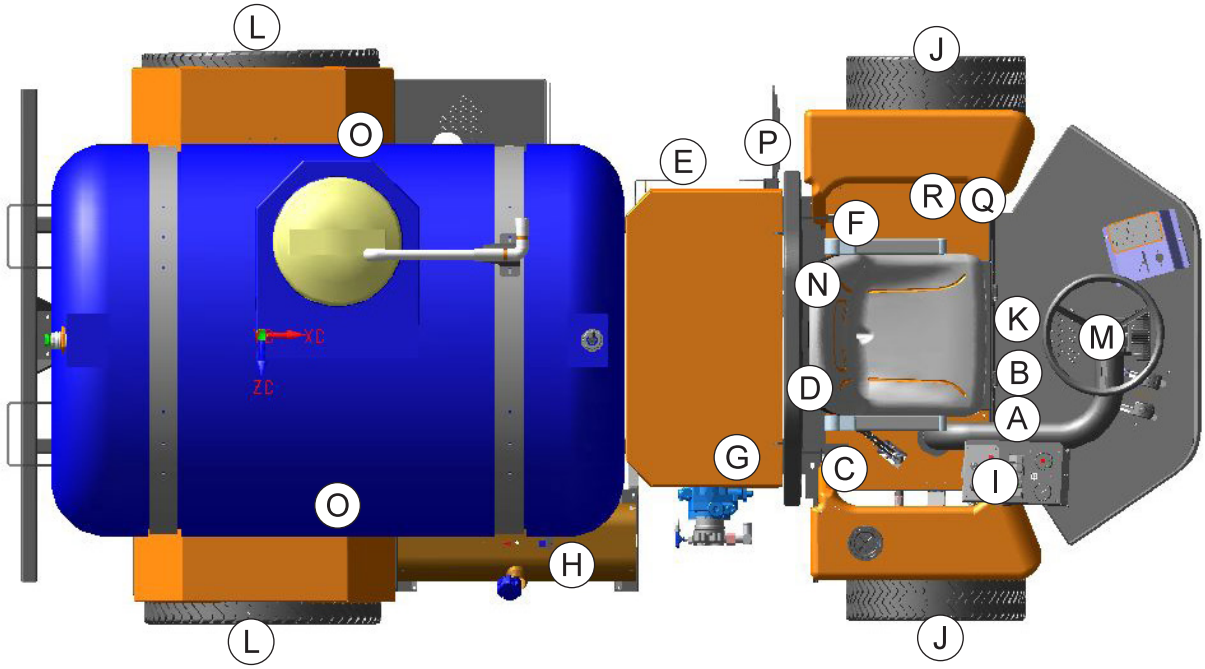

NOTES

QUICK REFERENCE REPLACEMENT PARTS

REPLACEMENT FILTERS

30-424	Hydraulic Oil Filter Assembly
30-424-01	Replacement Element
32-521-07	Primary Air Filter
32-521-08	Secondary Air Filter
13-488	Key Switch
32-521-04	In-line Fuel Filter Assembly
32-521-05	Muffler Gasket
32-521-10	Tailpipe Gasket

REPLACEMENT BELTS

30-432	Spray Pump V-Belt
30-042-11	Fan Belt

SEAL KITS

34-103	Power Steering Orbital Motor
15-301-01	Seal Kit
15-839	Hydraulic Cylinder (steering)
15-839-01	Seal Kit
13-406	Boom Actuators
14-267	Seal Kit
15-984	Hypro Pump
16-967	Seal Kit
30-099	Auburn Wheel Drive
30-099-01	Seal Kit
30-100	Disc Brake
30-100-01	Lining Kit
30-100-02	O-ring Kit
30-100-03	Bearing Kit
30-101	Wheel Motors
30-101-11	Seal Kit
30-423	Hydrostatic Pump
33-058-01	Seal Kit
76-197	Gear Pump
76-197-08	Seal Kit

FLUIDS

Engine Oil	SAE 10W-40 API Service SJ or higher Motor Oil
Hydraulic Fluid	SAE 10W-40 API Service SJ or higher Motor Oil
Radiator	1.06 Gal 50/50 Antifreeze/water mixture
Auburn Drive	25 oz. API-GL-5 80W/90

OTHER PARTS

15-818	#75 Fitting O-ring
15-817	#50 Fitting O-ring
16-220	Cover On Spray Tank

The Smithco Commercial Products Two-Year Limited Warranty

Smithco, Inc. (Smithco) warrants your 2016 or newer Smithco Commercial Product ("Product") purchased after October 1, 2016 to be free from defects in materials or workmanship for the period of time listed below. Where a warrantable condition exists, Smithco will repair the Product at no cost to you including diagnosis, labor (at the Smithco standard labor rate, subject to the Smithco flat rate schedule), and parts.

Warranty Duration is:

(1) Two years, 1500 operational hours* from the date of delivery to the original purchaser or Five years from the date of original manufacturer of the product, whichever occurs first. (*Products equipped with hour meter).

(2) Products used in rental situations are covered for 90 days from date of delivery to original user/renter.

Owner Responsibilities:

As the Product owner, you are responsible for required maintenance and adjustments stated in your Owner's Manual. Failure to perform required maintenance and adjustments can be grounds for disallowing a warranty claim. **You are particularly responsible to train all present and future operators of this product on the safe operation of this product at your location.**

Instructions for Obtaining Warranty Service:

You are responsible for notifying the Authorized Smithco Products Distributor from whom you purchased the Product as soon as you believe a warrantable condition exists and not later than 30 days from discovery of the condition.

If you need help locating an Authorized Smithco Distributor, or if you have questions regarding your warranty rights or responsibilities, you may contact us at:

Smithco Product Support Department
200 West Poplar Ave.
Cameron, Wisconsin 54822
Telephone: 800-891-9435 E-Mail: ProductSupport@Smithco.com

Maintenance Parts:

Parts scheduled for replacement as required maintenance ("Maintenance Parts"), are warranted for the period of time up to the scheduled replacement time for that part.

Items/Conditions Not Covered:

Not all product failures or malfunctions that occur during the warranty period are defects in materials or workmanship. The items/conditions listed below are not covered by this warranty:

- Product failures which result from the use of non-Smithco replacement parts, or from installation and use of add-on, modified, or unapproved accessories are not covered.
- Product failures which result from failure to perform required maintenance and/or adjustments are not covered.
- Product failures that result from operating the Product in an abusive, negligent or reckless manner are noT covered.
- This warranty does not apply to parts subject to consumption through use, unless found to be defective. Examples of parts which are consumed, or used up, during normal Product operation include, but are not limited to: blades, tines, teeth, scarifiers, rakes, plates, wear plates, castor wheels, tires, batteries, filters, belts, nozzles, etc.

- This warranty does not apply to failures caused by outside influence. Items considered to be outside influence include, but are not limited to, weather, storage practices, contamination, use of unapproved coolants, lubricants, additives, or chemicals, etc.

- This warranty does not apply to normal “wear and tear” items. Normal “Wear and Tear” includes, but is not limited to, damage to seats due to wear or abrasion, worn painted surfaces, scratched decals or windows, etc.

- Smithco may require the return of failed parts or components in order to determine the validity of any warranty claim.

- Smithco will not be obligated to replace components of other manufacturers if inspection by the original component manufacturer indicates that failure was due to normal wear and tear, expected consumption through use or improper care or service.

Other Legal Disclaimers:

The above remedy for product defects through repair or replacement by an authorized Smithco distributor or dealer is the purchaser’s sole remedy for any defect. This warranty gives you specific legal rights, and you may also have other rights which vary from state to state.

THERE ARE NO OTHER EXPRESS WARRANTIES OTHER THAN THOSE SET FORTH ABOVE. ALL IMPLIED WARRANTIES OF MERCHANTABILITY AND FITNESS FOR USE ARE LIMITED TO THE DURATION OF THE LIMITED WARRANTIES CONTAINED HEREIN.

Some states may not allow limitations on how long an implied warranty lasts, so the above limitation may not apply to you.

THE SMITHCO COMPANY IS NOT LIABLE FOR INDIRECT, INCIDENTAL OR CONSEQUENTIAL DAMAGES IN CONNECTION WITH THE USE OF THE PRODUCT, INCLUDING ANY COST OR EXPENSE OF PROVIDING A SUBSTITUTE PRODUCT OR SERVICE DURING PERIODS OF MALFUNCTION OR NON-USE.

Some states may not allow the exclusion of indirect, incidental or consequential damages, so the above exclusion may not apply to you.

Smithco neither assumes, nor authorizes any person to assume for it, any other liability in connection with the sale or use of this product.

Smithco
Wayne, PA 19087 www.smithco.com