Parts Manual

TOURNAMENT ULTRA XL70 GREENS ROLLER 70”

7020

SN: T9871

December, 2024

Product Support: ***1020 Hawaii Rd; Humboldt, KS 66748***
1-888-422-5173 wj@smithco.com

TABLE OF CONTENTS

TITLE	PAGE
Frame Drawing	1
Frame Parts List	2
Roller Housing Drawing	3
Roller Housing Parts List	4-5
Engine Cover Drawing	6
Engine Cover Parts List	7
Steering Arm Drawing	8
Steering Cover Parts List	9
Foot Pedal Linkage Drawing & Parts List	10
Control Panel Drawing & Parts List	11
Wiring Drawing & Parts List	12
Engine Drawing	13
Engine Parts List	14
Gas & Oil Tank Drawing	15
Gas & Oil Tank Parts List	16
Hydraulic Drawing	17
Hydraulic Parts List	18
Wheel Motor Drawing	19
Wheel Motor Parts List	20
750-846 Pump Drawing	21
750-846 Pump Parts List	22
Performance Chart	23-24
720-340 Light Kit Parts List & Installation	25-26
7516 Brush Kit Parts List & Installation	27-31
7525 Trailer Drawing	32
7525 Trailer Parts List	33
Trailer Springs	34
Replacement Parts List	35

7020 FRAME DRAWING

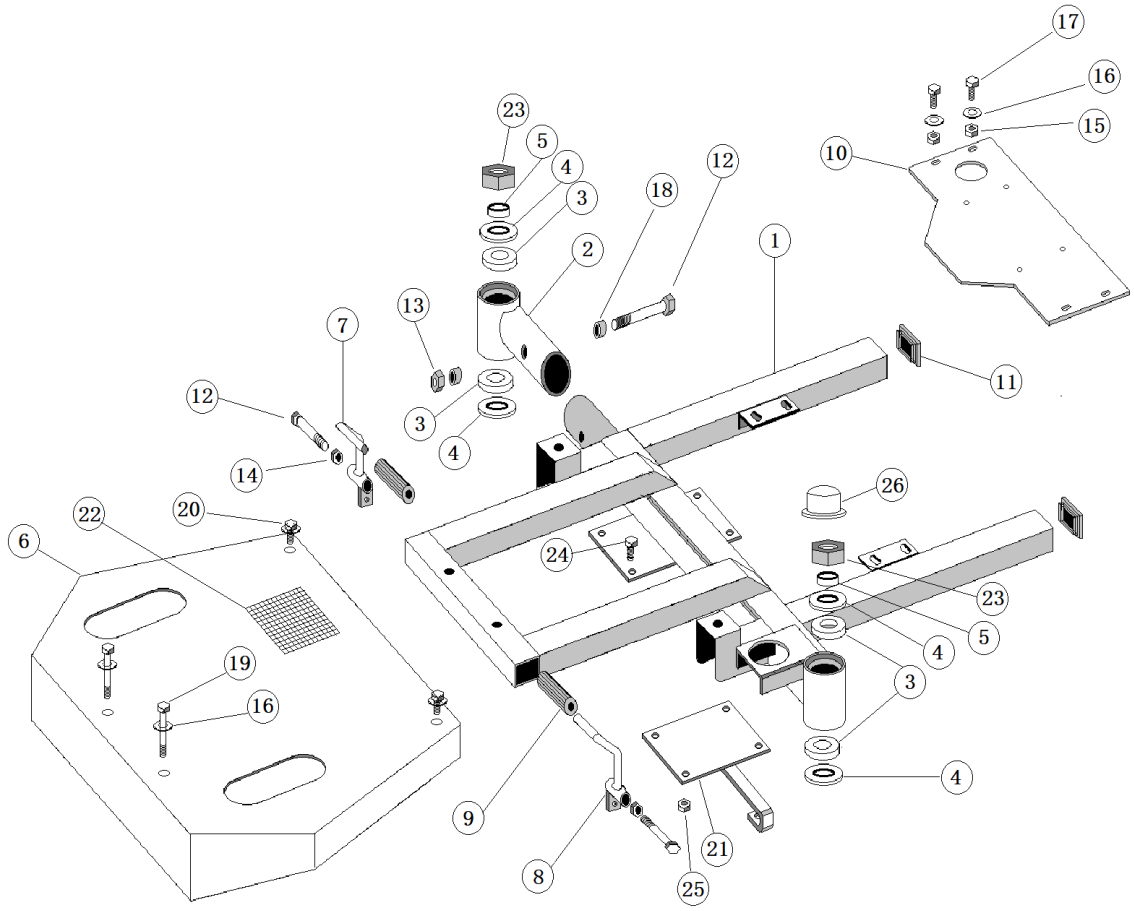

7020 FRAME PARTS LIST

REF#	PART#	DESCRIPTION	QTY.
1	720-316	Main Frame	1
2	750-166	Swivel Axle Bracket	1
3	932-023	Bearing	4
4	932-022	Seal	4
5	932-024	Spacer	2
6	720-312	Deck Plate	1
7	720-311	Right Foot Pedal	1
8	720-310	Left Foot Pedal	1
9	943-127	Accelerator Pedal Pad	2
10	750-978	Engine Base	1
11	750-924	2” Square Plug	2
12	400-061-1	½ - 13 x 3 ½” All Thread / Tap Bolt	3
13	400-112	½” - 13 Lock Nut 2-Way	1
14	400-105	½” – 13 Hex Nut	2
15	400-281	5/16” Flanged Lock Nut	6
16	400-202	5/16” Flat Washer	6
17	400-002	5/16” – 18 x 1” HHCS	4
18	750-186	Spacer ½” ID x ¾” OD x ½”	2
19	400-010	5/16” – 18 x 5” HHCS	2
20	400-346	3/8” – 16 x 1” Serrated Flange Bolt	2
21	750-588	Power Steering Bracket	1
22	720-305	Floor Board Mat	1
23	932-042	Thick Slotted Hex Nut 1 ¼”	2
24	400-014	3/8” – 16 x 1” HHCS	4
25	400-116	3/8” – 16 Lock Nut	4
26	750-192	1 1/8” Poly Hex Nut & Bolt Cap	2
NS	10-007	Oilite Bushing ½” ID x 11/16” OD x 1”	4
NS	709-143-1	Cotter Pin 1/8” x 2 ½”	2

7020 ROLLER HOUSING DRAWING

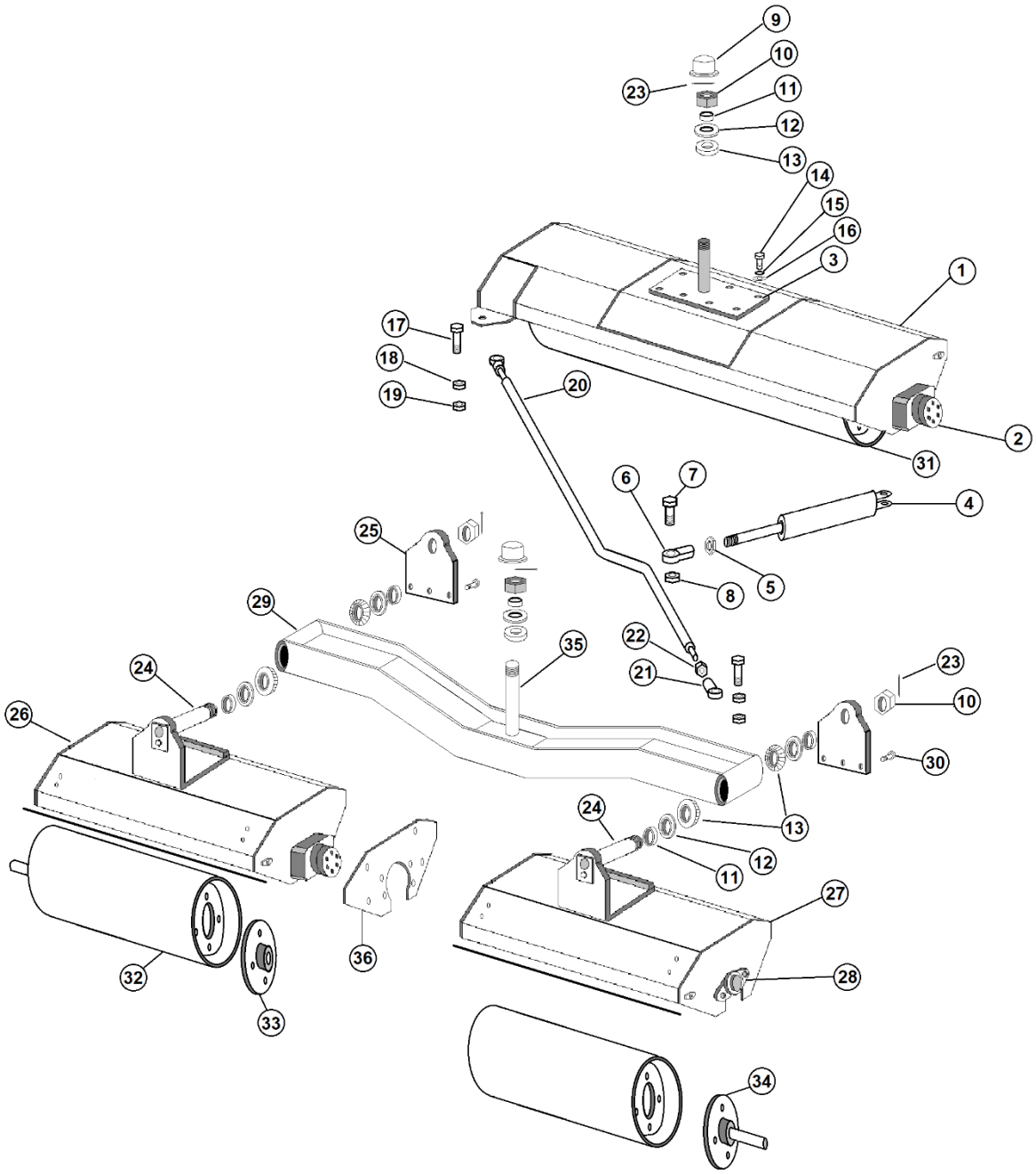

7020 ROLLER HOUSING PARTS LIST

REF#	PART#	DESCRIPTION	QTY.
1	720-313	Right Roller Housing	1
2	720-350	White OMPX 160 Wheel Motor	3
3	720-315	Roller Housing Shaft Plate	1
4	943-504	Hydraulic Cylinder	1
5	932-122	5/8” Jam Nut	1
6	932-121	5/8” Ball Joint	1
7	400-070	5/8” – 11 X 2” Bolt	2
8	400-331	5/8” Locknut	2
9	750-192	1 1/8” Poly Hex Nut & Cap	4
10	932-042	Slotted Nut 1 ¼”	4
11	932-024	Spacer	6
12	932-022	Seal	8
13	932-023	Bearing	8
14	400-099	½” x 1 ¾” Bolt	8
15	400-210	½” Lock Washer	8
16	400-112	½” – 13 Locknut	8
17	400-028	½” – 13 x 2” Bolt	2
18	400-286	½” Jam Nut	2
19	400-360	½” Flanged Top Lock	2
20	750-578	Tie Rod	1
21	713-806	½” Ball Joint	2
22	400-334	½” FT Flanged Nut	2
23	709-143-1	1/8” x 2 ½” Cotter Pin	4
24	750-572	Spindle Shaft	2
25	750-573	Flat Hanger Bracket	2
26	750-574	Roller Housing – Left Front	1
27	750-576	Roller Housing – Left Rear	1
28	720-004	Flange Bearing	3
29	720-325	Left Roller Crossmember	1
30	400-345	½” – 13 x 1 ¼” Flange Bolt	6
31	750-821	Roller Cylinder	1
32	750-557	Roller Cylinder	2
33	750-802	4-Bolt Hub	3
34	750-220-2	Hub w/Plate, Bushing & Shaft	3
35	720-326	Roller Crossmember Mounting Pin	1
36	750-827	Bolted End Plate	3
NI	400-346	3/8” – 16 x 1” Flange Bolt	12
NI	400-014	3/8” – 16 x 1” Bolt	14
NI	400-202	5/16” Flat Washer	16
NI	400-090	3/8” – 16 x 1 ¼” Bolt	6
NI	400-116	3/8” – 16 Locknut	18
NI	400-209	3/8” Lock Washer	2
NI	1188	7/16” FT x 1 ½” Lug Bolt	12

7020 ROLLER HOUSING PARTS LIST (Continued)

REF#	PART#	DESCRIPTION	QTY.
NI	400-119	7/16” – 20 Nylon Locknut	12
NI	750-210	Scraper Assembly	1
	750-210-1	Scraper Cable Only	1
	750-210-2	Scraper Knob Only	2
NI	750-577	Scraper Assembly	2
	750-577-1	Scraper Cable Only	2
	750-210-2	Scraper Knob Only	4

7020 ENGINE COVER DRAWING

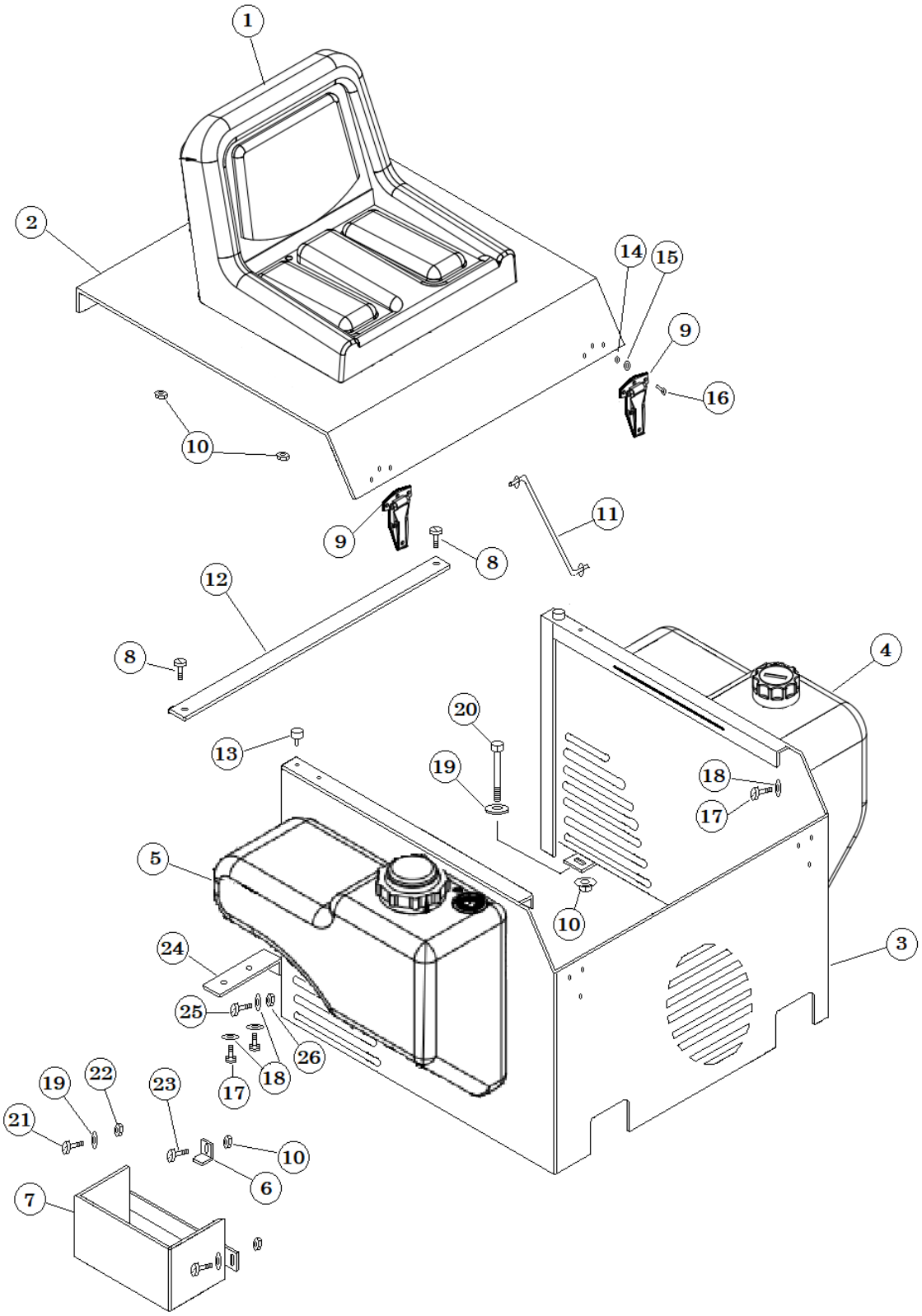

7020 ENGINE COVER PARTS LIST

REF#	PART#	DESCRIPTION	QTY.
1	832-123	Low-Back “Smithco” Seat	1
	832-123-1	Slide Seat Rails (Set)	1
2	750-253-1	Seat Plate	1
3	750-262	Engine Cover	1
4	943-111	Oil Tank	1
5	943-110	Gas Tank	1
6	750-977	Battery Hold Down Assembly	1
	750-977-1	Battery Hold Down	1
	750-977-2	Grip	1
7	750-402	Battery Box	1
8	400-321	¼” x ¾” – 20 Truss Head	2
9	730-058	Hinge	2
10	400-281	5/16” Flanged Lock Nut	9
11	750-897	Seat Prop	1
	400-201	¼” Flat Washer	1
	720-079	Cotter Pin 3/32” x ¾”	1
	732-022	5/16” Push Nut	1
12	750-290	Engine Cover Brace	1
13	41-143	Protective Bumper	2
14	400-249	10-32 Lock Nut	12
15	400-245	#10 Flat Washer	12
16	400-361	3/16” – 32 x ¾” Stove Bolt	12
17	400-043	¼” – 20 x ¾” Bolt	8
	400-208	¼” Lock Washer	8
18	400-201	¼” Flat Washer	12
19	400-202	5/16” Flat Washer	8
20	400-055	5/16” – 13 x 3” Bolt	4
21	400-003	5/16” – 18 x 1 ¼” Bolt	2
22	400-102	5/16” – 18 Hex Nut	2
	400-207	5/16” Lock Washer	2
23	400-002	5/16” – 18 x 1” Bolt	1
24	750-579	Tank Bracket	2
25	400-044	¼” – 20 x 1” Bolt	2
	400-208	¼” Lock Washer	2
26	400-101	¼” – 20 Hex Nut	2

7020 STEERING ARM DRAWING

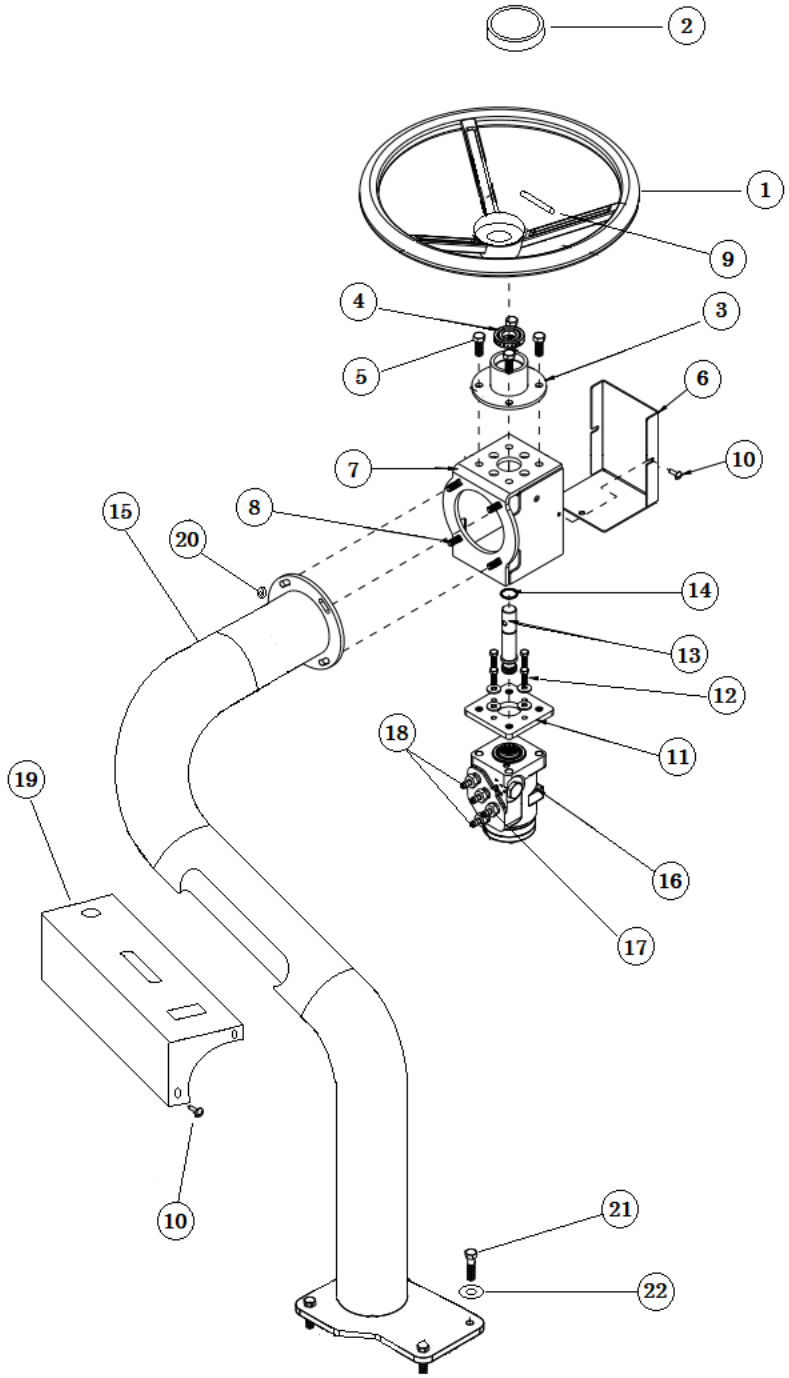

7020 STEERING ARM PARTS LIST

REF#	PART#	DESCRIPTION	QTY.
1	750-990-1	Steering Wheel Assembly	1
2	750-994	Steering Wheel Cap 1”	1
3	720-301	Steering Bearing Tube	1
4	720-318	Steering Post Bearing	1
5	400-014	3/8” – 16 X 1” HHCS	4
6	720-303	Steering Box Cover	1
7	720-300	Steering Box	1
8	400-012	5/16” – 18 x 1” Carriage Bolt	4
9	750-995	¼” x 2” Spring Pin	1
10	400-321	¼” x ¾” x 20 Phillips Truss Head Screw	6
11	720-302	Orb Adapter	1
12	400-337	#6 x ¾” Bolt	4
13	720-304	Splined Steering Shaft	1
14	400-362	¾” External Retaining Ring	1
15	720-317	Steering Arm	1
16	750-804	Steering Orbital	1
17	750-838	Hydraulic Fitting – Power Steering Pump	2
18	750-840	45° Fitting	2
19	720-309	Control Box	1
20	400-281	5/16” Flanged Lock Nut	4
21	400-090	3/8” – 16 x 1 ¼” HHCS	4
22	400-202	5/16” Flat Washer	4

7020 FOOT PEDAL LINKAGE DRAWING

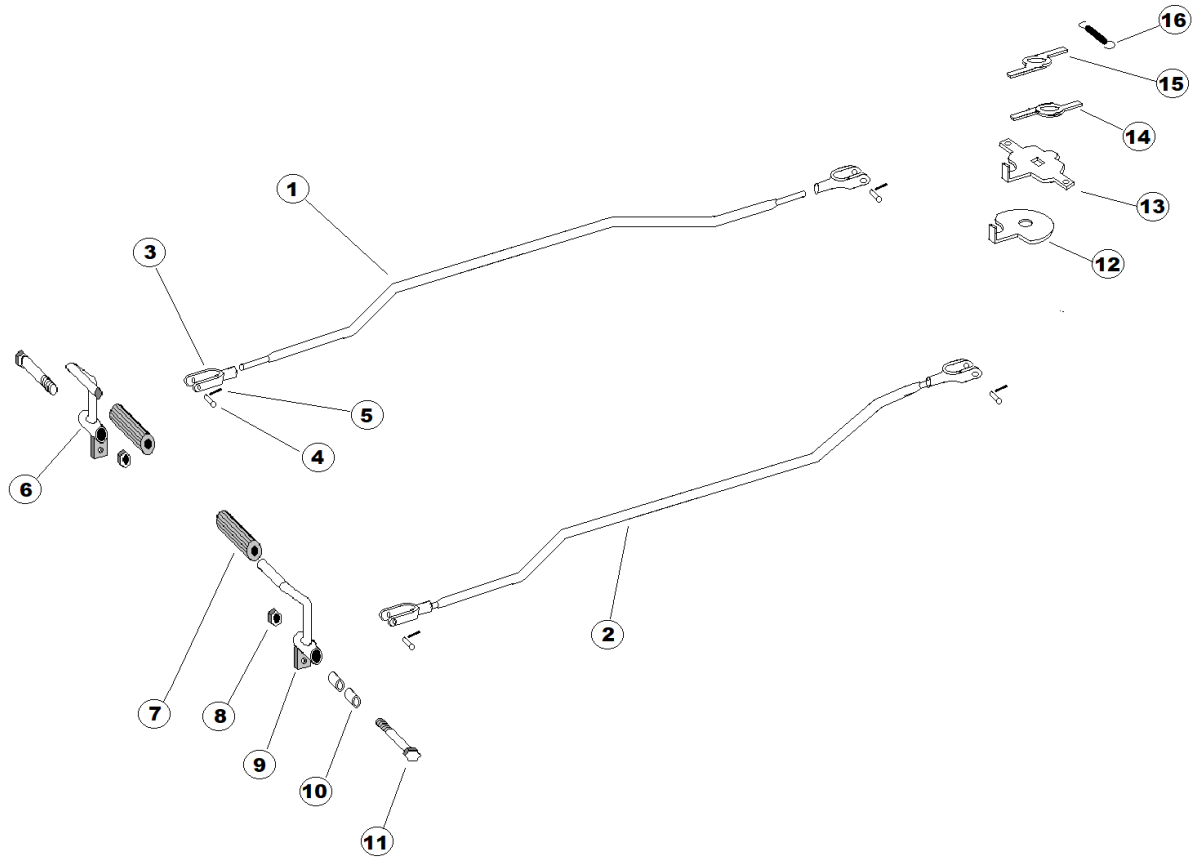

7020 FOOT PEDAL LINKAGE PARTS LIST

REF#	PART#	DESCRIPTION	QTY.
1	750-004-1	Right Foot Pedal Rod Assy. (Complete)	1
2	750-005-1	Left Foot Pedal Rod Assy. (Complete)	1
3	11-101-1	Linkage Yoke	4
4	720-078-1	5/16” x 1” Clevis Pin	4
5	750-079	Cotter Pin	4
6	720-311	Right Foot Pedal	1
7	943-127	Accelerator Pedal Pad	2
8	400-105	½” -13 Hex Nut	2
9	720-310	Left Foot Pedal	1
10	10-007	Oilite Bushing ½” ID x 11/16” OD x 1”	4
11	400-061-1	½” x 3 ½” Bolt	2
12	750-343-2	Shift Lever Top	1
13	750-344-1	Shift Lever Bottom 2 of 4 w/Bolt	1
14	750-345-2	Shift Lever Right	1
15	750-346-2	Shift Lever Left	1
16	750-229	Silver Spring	1

7020 CONTROL PANEL DRAWING

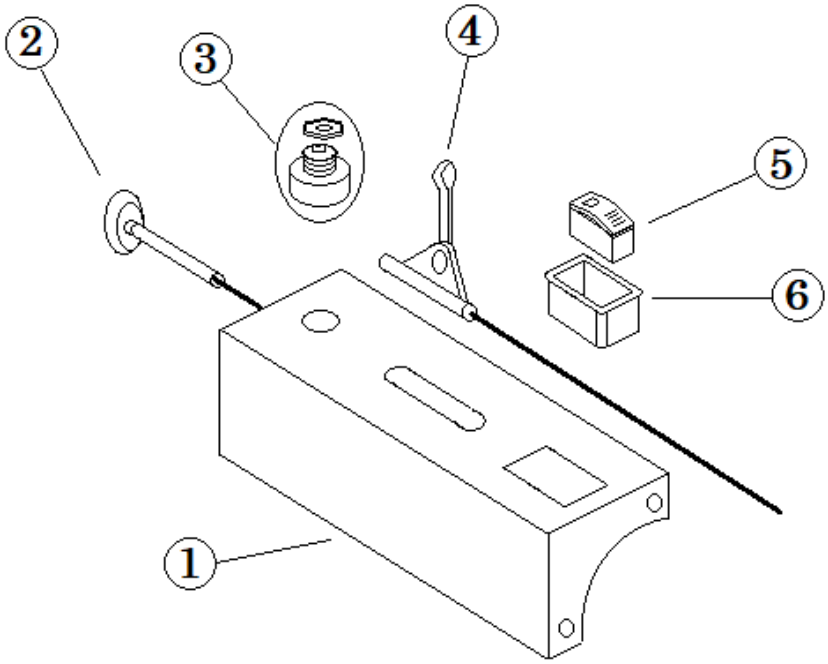

7020 CONTROL PANEL PARTS LIST

REF#	PART#	DESCRIPTION	QTY.
1	720-309	Control Box	1
2	943-126	Choke Cable	1
3	932-071	Key Switch w/Washer, Nut & Key	1
4	750-715	Throttle Cable 72”	1
5	44-943	On-Off Light Switch	1
6	720-324	Single Mounting Panel	1
NI	720-330	Control Panel Decal	1

7020 WIRING DRAWING

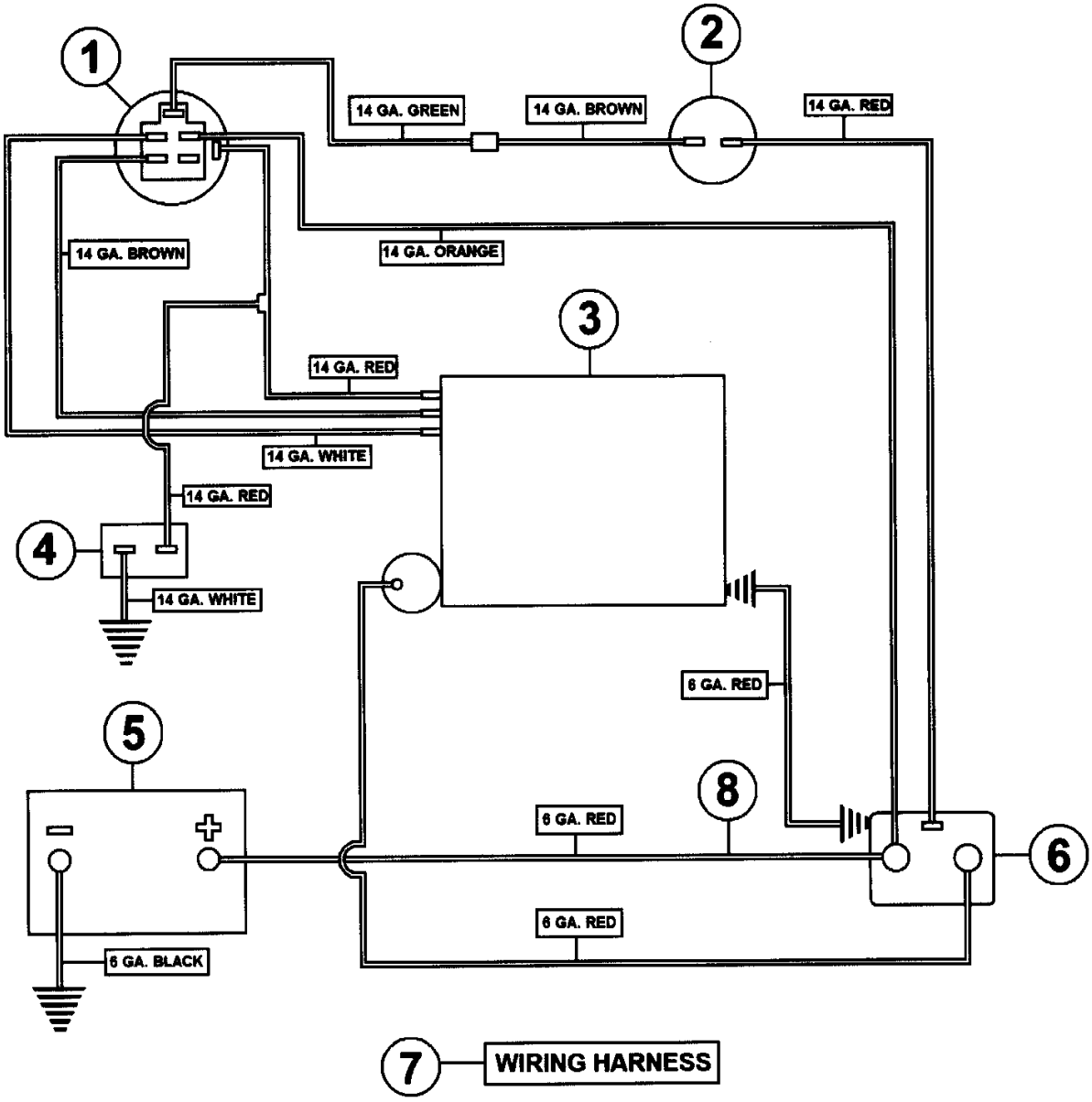

WIRING PARTS LIST

REF#	PART#	DESCRIPTION	QTY.
1	932-071	Key Switch	1
2	932-119-1	Safety Seat Switch	1
3	943-100	16 HP Vanguard Twin Engine	1
4	44-873	Hour Meter	1
5		Battery	
6	932-072	Solenoid	1
7	750-589	Wiring Harness	1
8	750-401	Battery Wire 6GA (+) Red 33”	1

7020 ENGINE DRAWING

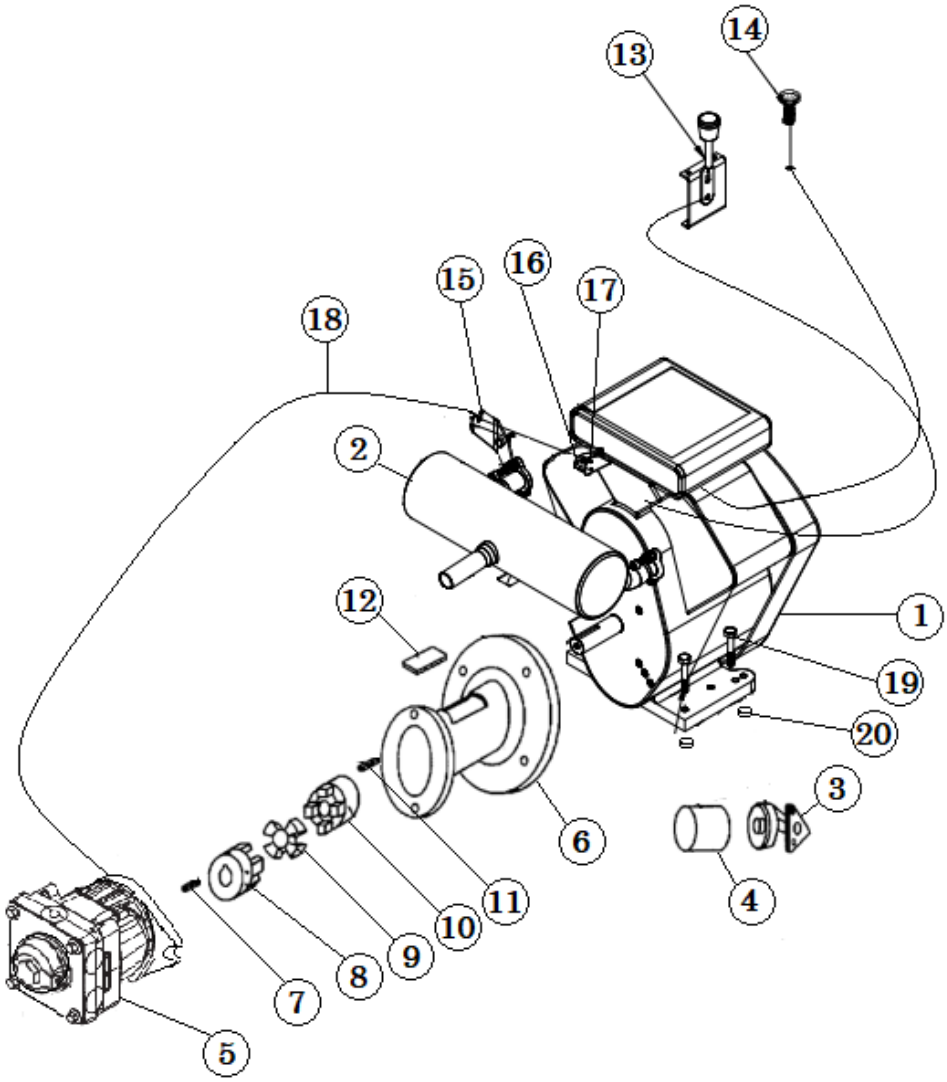

7020 ENGINE PARTS LIST

REF#	PART#	DESCRIPTION	QTY.
1	943-100	16 HP Engine (Model# 305447 Type 0600-G1)	1
2	943-115	Muffler f/16 HP Engine	1
3	943-159	Adapter	1
4	943-104	Engine Oil Filter	1
5	750-846	16 cc w/Aux Charge Pump	1
	400-090	3/8” – 16 x 1 ¼” Bolt	2
	400-202	5/16” Flat Washer	2
	400-209	3/8” Lock Washer	2
6	750-255	5 ½” Bell Housing	1
	400-090	3/8” – 16 x 1 ¼” Bolt	4
	400-202	5/16” Flat Washer	4
	400-209	3/8” Lock Washer	4
7	750-201	#5 Key	1
8	750-851	Pump Hub 17mm w/#5 Key	1
9	720-027	Element	1
10	41-147	Coupling 1” Bore w/1/4” Keyway	1
11	1517	¼” Key	1
12	750-127-1	Bell Housing Cover	1
13	750-715	Throttle Cable 72”	1
14	943-126	Choke Cable	1
15	720-307	Cable Bracket	1
16	720-306	Throttle Adapter	1
17	720-319	Throttle Cable Clamp	1
18	720-308	Throttle Cable Assembly	1
	720-308-1	Cable Sleeve	1
	720-308-2	Cable Only	1
	400-135	5/16” – 24 FT Jam Nut	4
19	400-005	5/16” – 18 x 1 ¾” Bolt	4
20	400-281	5/16” Flanged Lock Nut	4
NI	41-160	Gas Inline Filter	1
NI	750-950	Maintenance Service Kit	1

7020 GAS & OIL TANK DRAWING

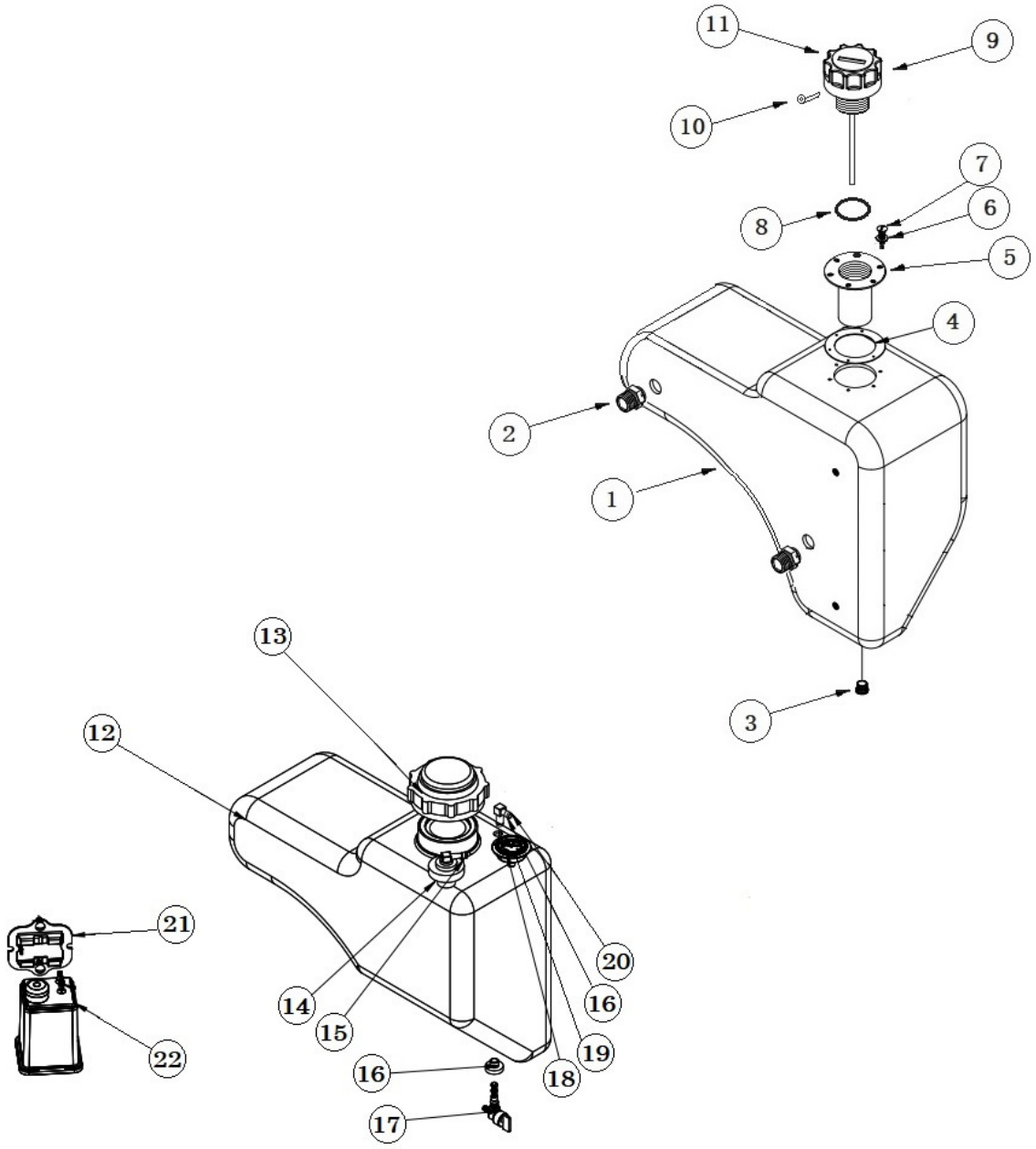

7020 GAS & OIL TANK PARTS LIST

REF#	PART#	DESCRIPTION	QTY.
1	943-111	Oil Tank	1
2	750-326	8-10 Wheel Motor & Tank Fitting Str.	2
3	750-256	O-Ring Plug	1
4	750-954-5	Gasket	1
5	750-954-4	Screen	1
6	400-219	#8 Flat Washer	6
7	400-053	8/32” x ½” Machine Screw	6
8	750-954-3	O-Ring	1
9	750-954-1	Cap w/Dipstick	1
10	750-954-2	Pull Pin	1
11	750-954	Oil Cap w/Dipstick (Assembly)	1
12	943-110	Gas Tank	1
	638	¼” Hose 35”	1
	638	¼” Hose 17”	1
	18-004	½” Pinch Clamp	2
13	943-110-5	Vented Gas Tank Cap	1
14	943-110-11	Grommet f/Rollover Valve	1
15	943-110-4	Vent Valve	1
16	943-110-7	Rubber Bushing f/Gas Valve	2
17	943-110-2	Gas Tank Valve	1
18	943-110-10	Fuel Gauge Gasket	1
19	943-110-6	Fuel Gauge	1
20	943-110-8	Street Elbow	1
21	943-240	Canister Mount	1
	400-321	¼” x ¾” – 20 Truss Head	2
	400-201	¼” Flat Washer	4
	400-108	¼” – 20 Lock Washer	2
	400-101	¼” – 20 Hex Nut	2
22	943-241	Canister	1

7020 HYDRAULIC DRAWING

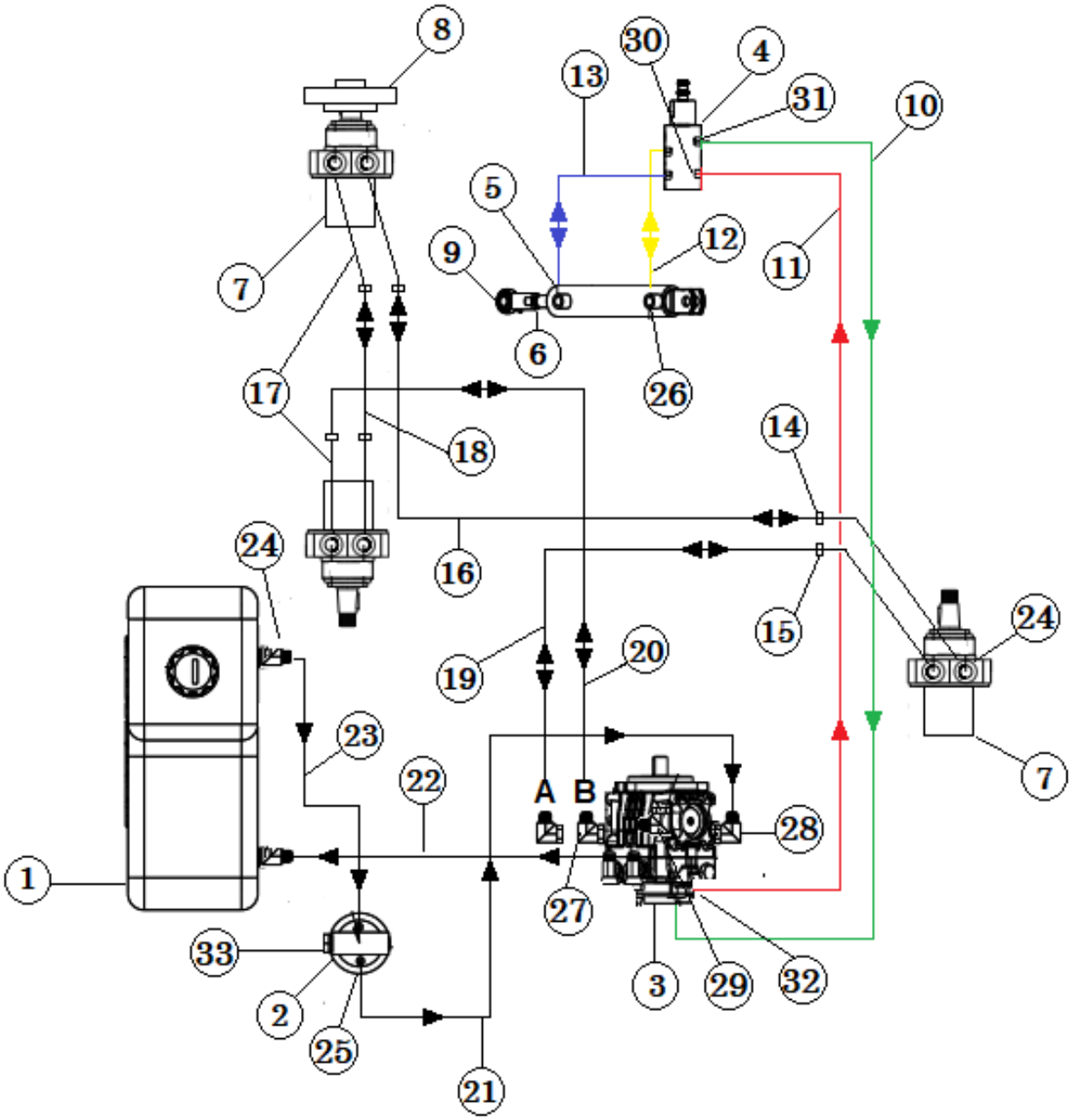

7020 HYDRAULIC PARTS LIST

REF#	PART#	DESCRIPTION	QTY.
1	750-111	Oil Tank	1
2	750-302	Filter head	1
3	750-846	16 cc w/Aux Charge Pump	1
4	750-804	Hydraulic Steering Orbital	1
5	943-504	Steering Cylinder	1
6	932-122	5/8 jam nut	1
7	750-801	Wheel motor	3
8	750-802	4-Bolt Motor hub	3
9	932-121	5/8” Threaded rod end	1
10	720-320	96” Pump to orb hose (Long) ST - 45°	1
11	720-321	96” Pump to orb hose (Long) ST -ST	1
12	720-322	Orb to Steering Cylinder ST- ST 63”	1
13	720-323	Orb to Steering Cylinder ST – ST 56”	1
14	750-506	Hard Line - Long Right Side	1
15	750-507	Hard Line - Short Right Side	1
16	750-562	½” Hose 66” ST- 45°	1
17	750-561	Short Hard Line 8” w/90°	4
18	750-563	½” Hose 78’’ ST- ST	1
19	750-511	½” Hose 62’’ ST- ST	1
20	750-564	½” Hose 64’’ ST- ST	1
21	750-310	½” Hose 24 1/4’’ Filter Head to Pump	1
22	750-305	½” hose 11’’ Oil tank to pump	1
23	750-306	½” hose 7 ¼’’ Tank to Filter Head	1
24	750-326	8-10 Wheel Motor & Tank Fitting Str.	8
25	750-325	8 – 12 Oil Filter Head Fitting Str.	2
26	750-837	Hydraulic Fitting 90° flare	2
27	750-322	Pump Fitting 45°	2
28	750-848	8 – 8 Pump Fitting ST	1
29	750-324	8-6 90° Pump Fitting - Top	1
30	750-838	Hydraulic Fitting ST Flare	3
31	750-840	Steering Orb Fitting 45°	1
32	750-834	Hydraulic Fitting ¼” 45°	2
33	750-300	Hydraulic Filter	1

750-801 WHEEL MOTOR DRAWING

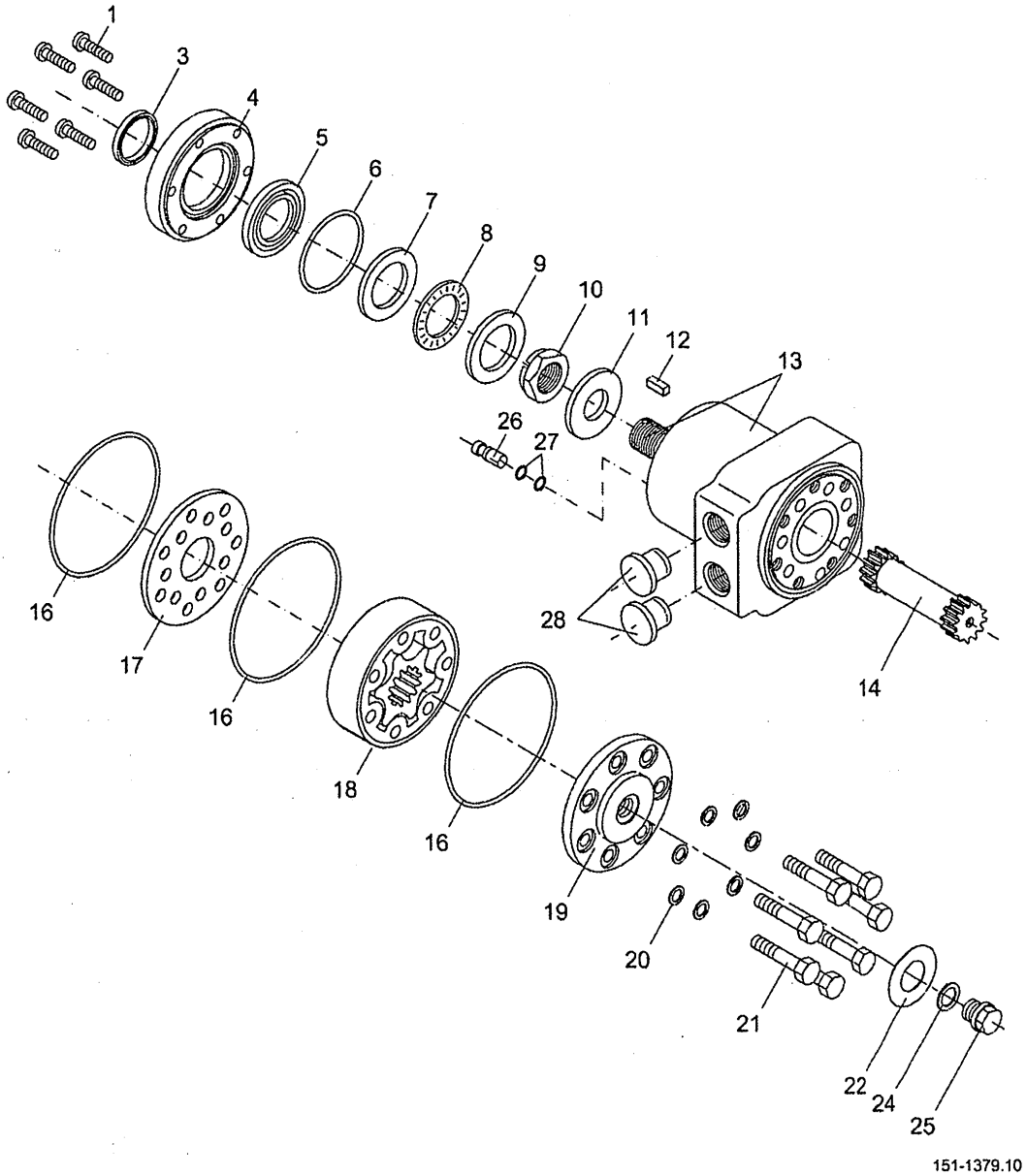

750-801 WHEEL MOTOR PARTS LIST

REF#	PART#	DESCRIPTION	QTY.
1	750-801-6	Screw	6
3	750-801-5	Dust Seal Ring	1
4	750-801-7	Spigot Flange	1
5	750-801-5	Shaft Seal	1
6	750-801-5	O-Ring	1
7	750-801-8	Bearing Race	1
8	750-801-9	Axle Needle Bearing	1
9	750-801-10	Bearing Race	1
10	750-801-3	Castellated Nut	1
11	750-801-12	Washer	1
12	740-023	Woodruff Key, 3/16” x ¾”	1
14	750-801-14	Cardan Shaft	1
16	750-801-5	O-Ring	3
17	750-801-15	Distributor Plate	1
18	750-801-16	Gear Wheel Set	1
19	750-801-17	End Cover	1
20	750-801-18	Washer	7
21	750-801-19	Screw	7
24	750-801-20	Washer	1
26	750-801-21	Check Valve	2

Note: Reference #’s 3, 5, 6 & 16 are part of the 750-801-5 Seal Kit

750-846 PUMP DRAWING

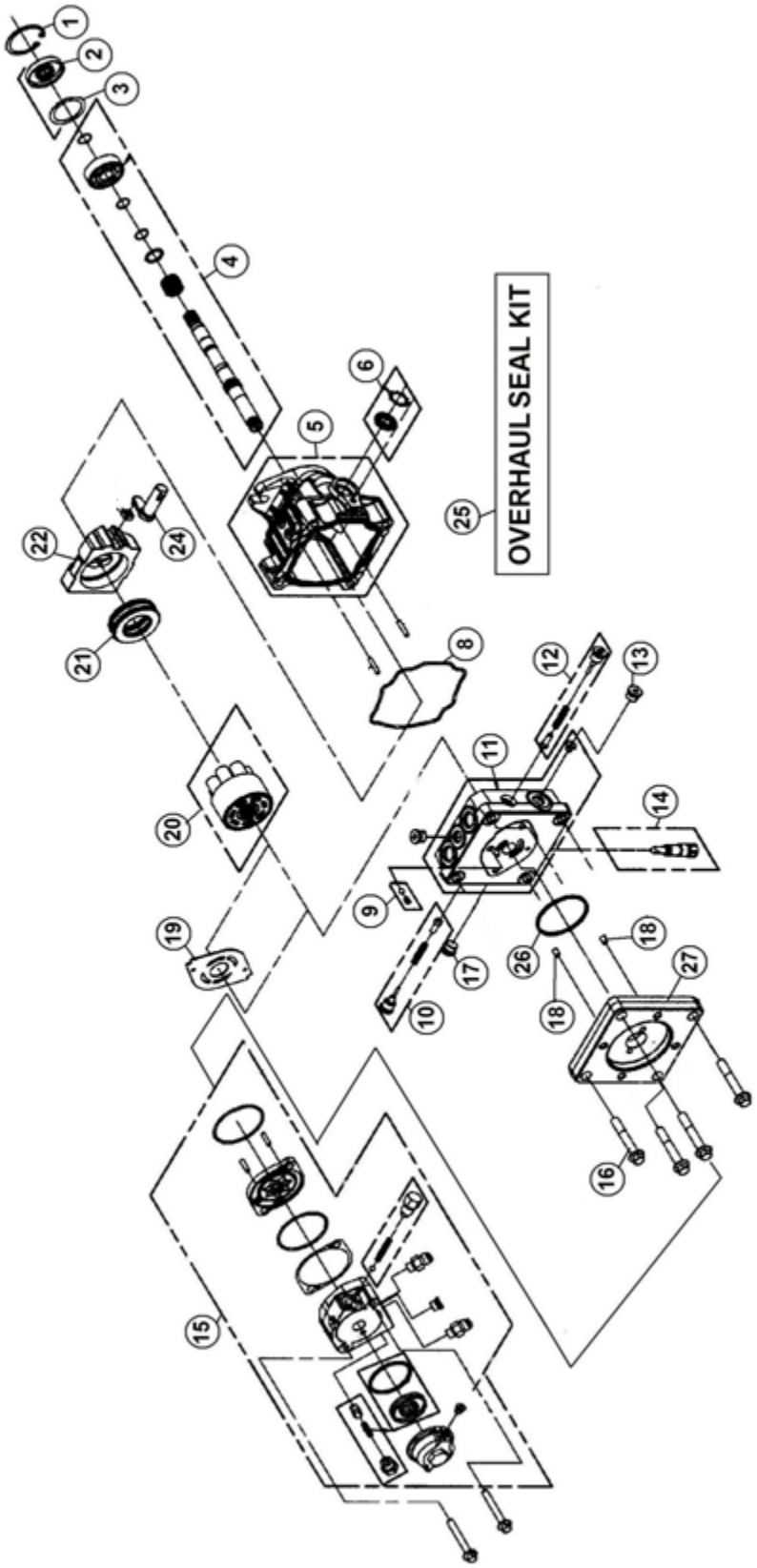

750-846 PUMP PARTS LIST

REF#	PART#	DESCRIPTION	QTY.
1	750-847-3	Retaining Ring	1
2	750-847-4	Lip Seal	1
3	750-847-5	Spacer	1
4	750-847-6	Shaft Kit	1
5	750-847-7	Bare Housing	1
6	750-847-8	Trunnion Seal Kit	1
8	750-847-9	O-Ring	1
9	750-847-10	Charge Relief	1
10	750-847-11	Shock Valve Kit	1
11	750-847-12	End Cap	1
12	750-847-11	Shock Valve Kit	1
13	750-847-13	Plug	1
14	750-228-7	Bypass Valve	1
15	750-846-1	Charge Pump	1
16	750-846-2	Screw	4
17	750-847-13	Plug	1
18	750-846-3	Screw	2
19	750-847-17	Valve Plate	1
20	750-847-18	Cylinder Block	1
21	750-847-19	Thrust Bearing	1
22	750-847-20	Swash Plate	1
24	750-847-21	Trunnion Arm	1
25	750-849	Seal Kit f/16 CC Pumps	1
26	750-846-4	O-Ring	1
27	750-846-5	Plate	1

PERFORMANCE CHART

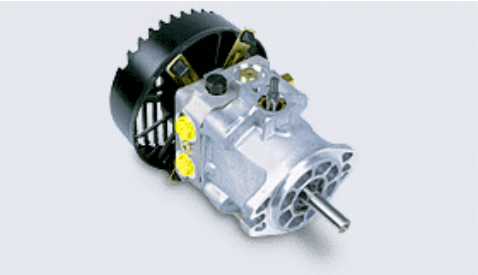

Product Type		PC	PG	PJ	PR	PW
Displacement	in^3/rev [cc/rev]	0.37 [6.1]	0.62 [10.2]	0.73 [12]	0.97 [16]	1.33 [21.8]
Input Speed						
Maximum Unloaded	rpm	3600	3600	3600	3600	3600
Minimum Loaded	rpm	1800	1800	1800	1800	1800
System Operating Pressure						
Continuous	psi	750	1000	1000	1250	1250
	[bar]	[51]	[70]	[70]	[86]	[86]
Intermittent	psi	1750	2100	2100	2500	2500
	[bar]	[120]	[145]	[145]	[172]	[172]
Peak	psi	2500	3500	3500	3750	3750
	[bar]	[172]	[240]	[240]	[260]	[260]
Pump Performance						
@ 2400 rpm/1000 psi	gpm [l/min]	3.6 [13.6]	6.1 [23.1]	7.1 [26.8]	9.6 [36.3]	13.1 [49.6]
@ 3000 rpm/1000 psi	gpm [l/min]	4.5 [17.0]	7.6 [28.8]	8.9 [33.6]	12 [45.4]	16.4 [62.1]
@ 3600 rpm/1000 psi	gpm [l/min]	5.4 [20.4]	9.2 [34.8]	10.8 [40.8]	14.4 [54.5]	19.6 [74.2]
Case Pressure						
Maximum @ Cold Start	psi [bar]	10 [0.7]	10 [0.7]	10 [0.7]	25 [1.7]	25 [1.7]
Continuous - Max.	psi [bar]	4 [0.3]	4 [0.3]	4 [0.3]	10 [0.7]	10 [0.7]
Inlet Vacuum						
Maximum Continuous Inches Mercury		4	4	4	4	4
Charge Pump Displacement(s)						
	in^3/rev [cc/rev]	.13 [2.1]	0.11/0.13 [1.9/2.1]	0.19 [3.2]	0.13/0.19 [2.1/3.2]	0.13/0.19 [2.1/3.2]
Auxiliary Pump Displacement						
	in^3/rev [cc/rev]	0.19 [3.2]	0.19 [3.2]	0.19 [3.2]	0.19 [3.2]	0.19 [3.2]
Auxiliary Pump Relief Setting						
	psi [bar]	650 [45]	650 [45]	650 [45]	650 [45]	650 [45]
Auxiliary Pump Performance @3200 rpm, 500 psi, 70 SUS [13 Cst] oil, & 180°F	gpm [l/min]	1.8 - 2.0 [6.8 - 7.6]	1.8 - 2.0 [6.8 - 7.6]	1.8 - 2.0 [6.8 - 7.6]	1.8 - 2.0 [6.8 - 7.6]	1.8 - 2.0 [6.8 - 7.6]
Control Torque Required to Stroke Pump [Approximate - 20° External Stroke Angle]						

	lb-in / 1000 psi	75	85	85	95	105
	[N-m / 70 bar]	[8.5]	[9.6]	[9.6]	[10.7]	[11.9]
	lb-in / 500 psi	55	60	60	75	85
	[N-m / 35 bar]	[6.2]	[6.8]	[6.8]	[8.5]	[9.6]
Pump Oil Temperature						
Maximum Intermittent (hottest point)	°F	230	230	230	230	230
	[°C]	[110]	[110]	[110]	[110]	[110]
Normal Operating Range	°F	-10 to 200	-10 to 200	-10 to 200	-10 to 200	-10 to 200
	[°C]	[-23 to 93]	[-23 to 93]	[-23 to 93]	[-23 to 93]	[-23 to 93]
Fluid Viscosity Limits @ 230°F [110°C]						
Optimum	SUS[cSt]	70 [13]	70 [13]	70 [13]	70 [13]	70 [13]
Minimum	SUS[cSt]	55 [9]	55 [9]	55 [9]	55 [9]	55 [9]
Weight of Unit						
	lbs [kg]	7 [3.2]	8 [3.6]	12.65 [5.7]	12 [5.4]	14 [6.3]
Inlet Filtration Requirement						
Nominal	micron	25	25	25	25	25

720-340 LIGHT KIT PARTS LIST (Optional Accessory)

PART#	DESCRIPTION	QTY.
750-341	Wiring Harness	1
750-341-3	Light Brackets	2
720-342	Light Assembly	2

LIGHT KIT INSTALLATION

1. Bolt the light brackets under the gas and oil tanks. (As shown below)

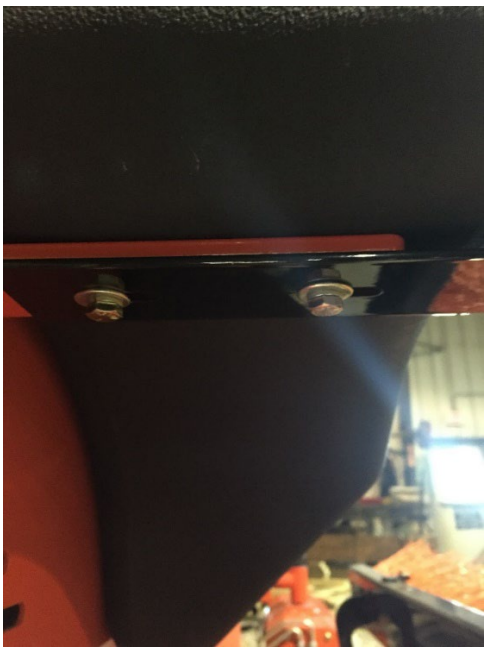

2. Bolt the lights to the light brackets. Bolt the switch tab under the light over the battery side for the toggle switch.

3. Connect wiring to the lights. Wiring can run in back of the machine at the top. Zip tie the wiring to the bar at the back of the machine. Put the toggle switch in the switch tab.

4. Fasten the fuse to the positive on the battery and black to the negative on the battery.

7516 BRUSH KIT DRAWING (Optional Accessory)

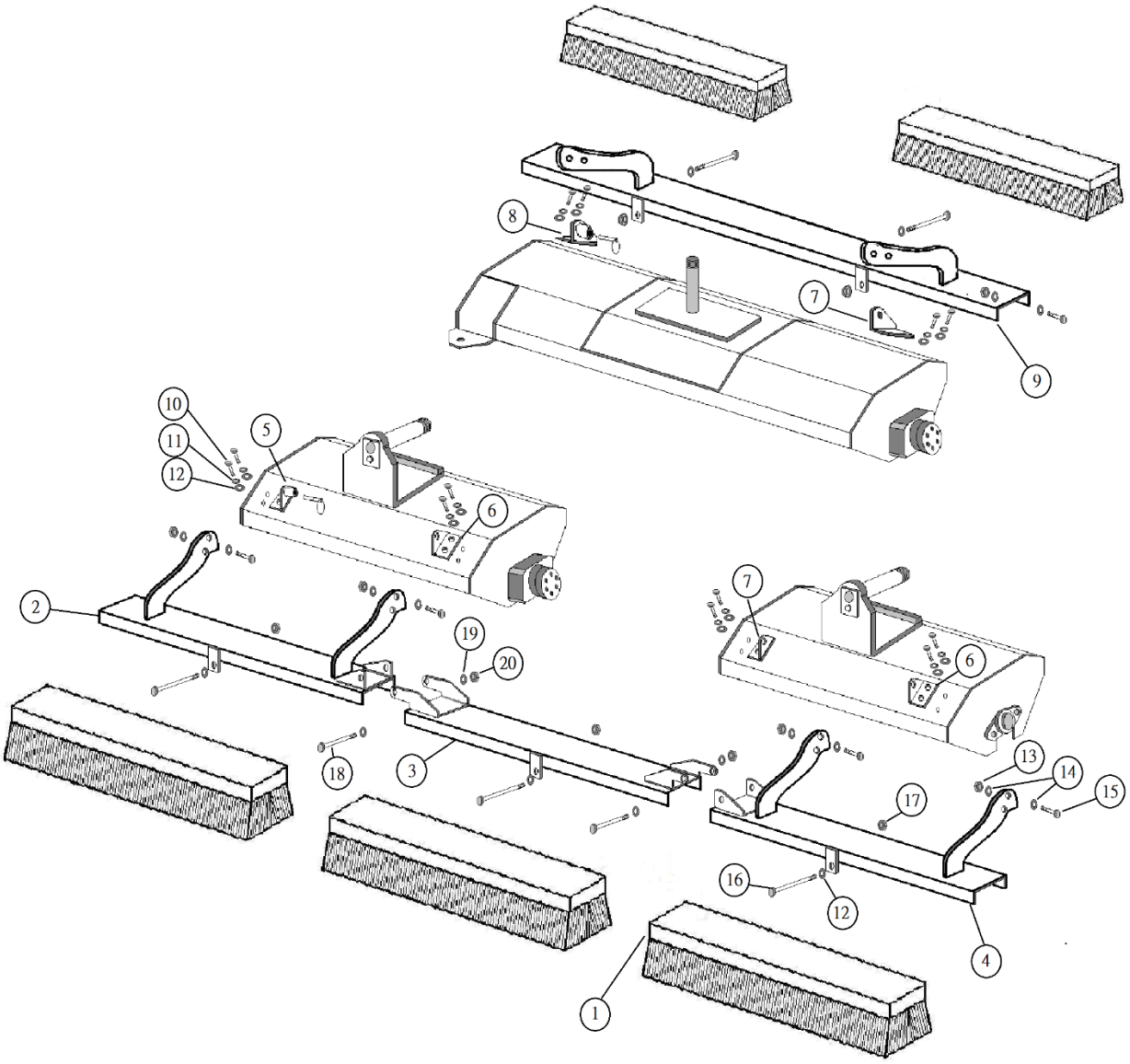

7516 BRUSH KIT PARTS LIST (Optional Accessory)

REF #	PART#	DESCRIPTION	QTY.
1	750-410	Roller Brush	5
2	750-985	Left Front Brush Mount	1
3	750-986	Left Center Brush Mount	1
4	750-987	Left Rear Brush Mount	1
5	750-902	Left Brush Bracket Mount w/Pin	1
6	750-901	Left Brush Bracket Mount	2
7	750-857	Right Brush Bracket Mount	2
8	750-855	Right Brush Bracket Mount w/Pin	1
9	750-856	Right Brush Bracket	1
10	400-002	5/16” – 18 x 1” HHCS	12
11	400-207	5/16” Lock Washer	12
12	400-201	¼” Flat Washer	32
13	400-112	½” – 13 Lock Nut 2-Way	6
14	40-128-1	½” ID x 7/8” OD x 14Ga Machine Bushing	18
15	400-027	½” – 13 x 1 ½” HHCS	6
16	400-010	5/16” – 18 x 5” HHCS	5
17	400-281	5/16” Flanged Lock Nut	13
18	400-022	3/8” – 16 x 4 ½” HHCS	2
19	400-202	5/16” Flat Washer	4
20	400-116	3/8” – 16 Lock Nut Gold	2
NI	400-343	5/16” x 1” Lag Screw	15
NI	750-441	Ramp Latch	2

7516 BRUSH KIT INSTALTION INSTRUCTIONS

Items you will need.

1. TAPE MEASURE
2. DRILL
3. 5/16” X 18 TAP (OPTIONAL)
4. DRILL BIT (13/64) FOR TAPPING OR (21/64) IF NOT ABLE TO TAP
5. SPEED SQUARE
6. CENTER PUNCH
7. A WAY TO MARK THE HOLES

STEP 1.

Measure the left front roller housing and mark your holes at 1 7/8’’ in from the bearing side and at 2 ¾’’ and 3 ¾’’ from the bottom of the housing.

STEP 2.

Measure the left front roller housing and mark your holes at 2 1/8’’ in from the roller motor side and at 2 ¾’’ and 3 ¾’’ from the bottom of the housing. Your holes should be 18 ¼’’ apart.

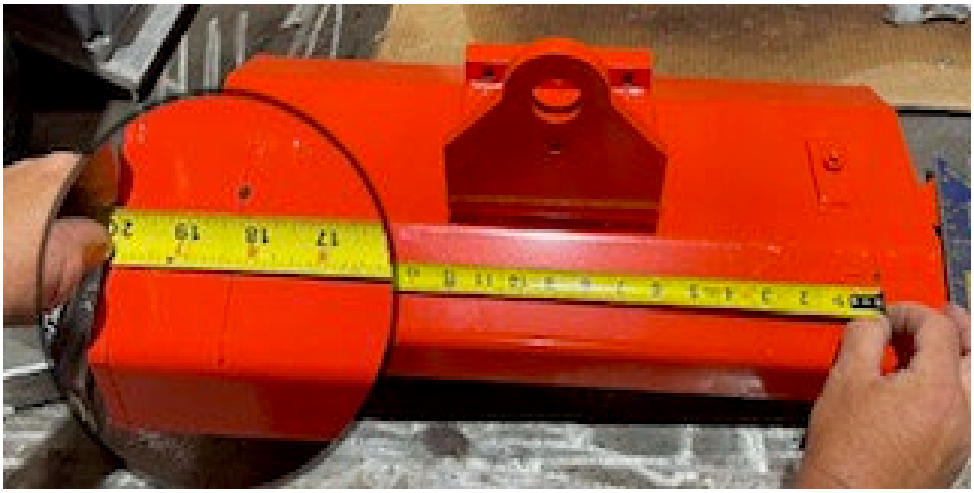

Step 3.
On the left rear roller housing please repeat steps 1 and 2.

Step 4.
With a center punch mark your holes.

Step 5.
At this time you can ether drill your holes to 13/64 if you choose to tap the holes to 5/16'' or if you would like to use the 8 extra 5/16'' flange nuts you can drill the holes to 21/64''. This step is up to you on how you would like to do so.

Step 6.
Install the front and rear brush's to the roller housings using the (8) 5/16 x 1 bolts that are supplied in the kit. Make sure that the brush mount with the pin is mounted to the front housing.

Step 7.
Install the center brush using the (2) 3/8'' x 4 ½ bolts and lock nuts. Make sure not to over tighten the bolts as it needs to be able to float in the middle of the front and rear brush.

Step 8.
Install the right side brush using the (4) 5/16'' x 1 bolts and tighten.

7525 TRAILER DRAWING F/7000 ROLLER

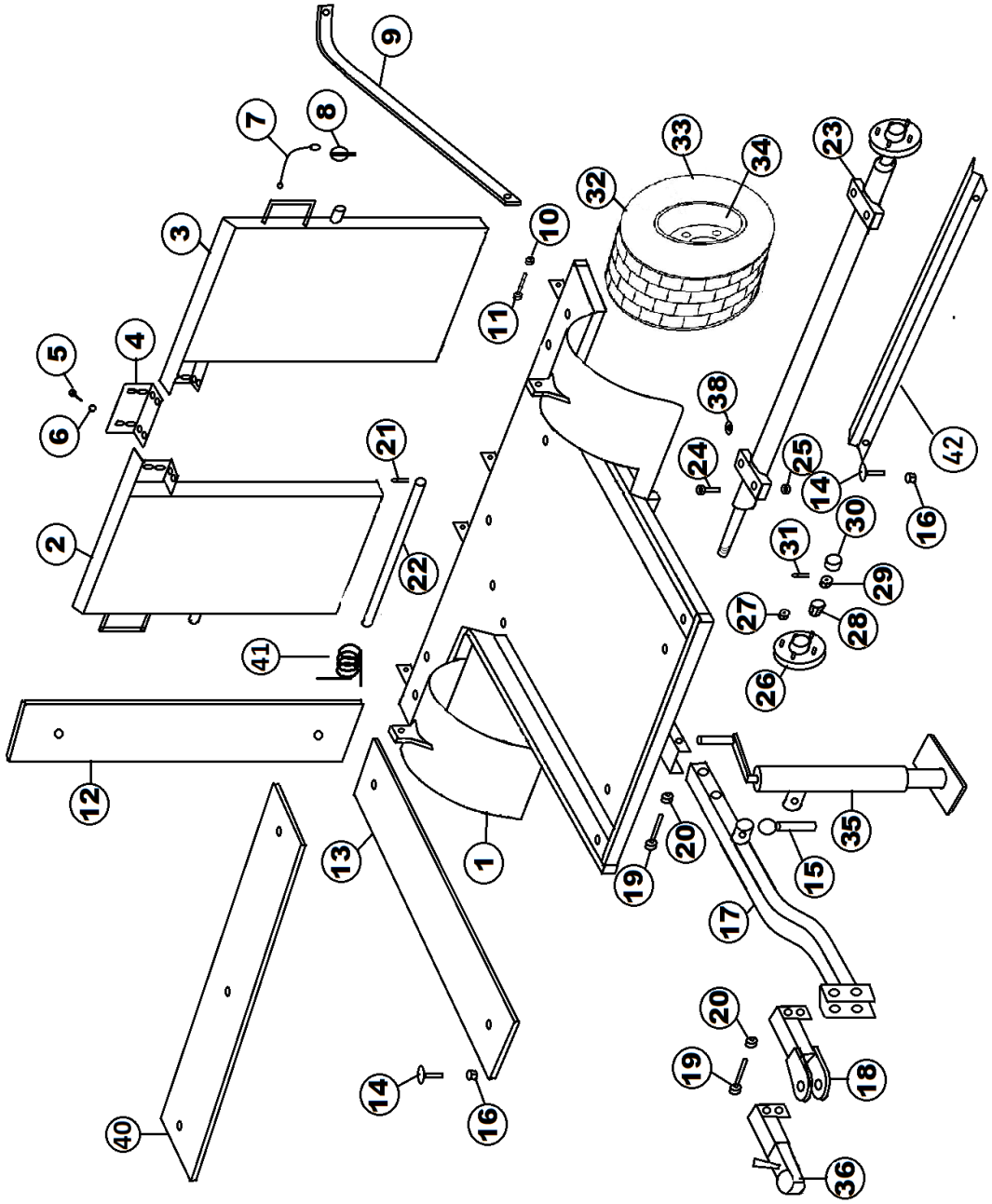

7525 TRAILER PARTS LIST F/7000 ROLLER

REF#	PART#	DESCRIPTION	QTY.
1	750-430	Trailer Bed	1
2	750-432	Right Side Ramp	1
3	750-431	Left Side Ramp	1
4	750-433	Ramp Plate	1
5	400-321	¼” X ¾” X 20 Truss Head Bolt	8
6	400-342	¼” Flanged Lock Nut	8
7	750-422	3/64 x 6 Lanyard	2
8	750-421	Snap Pin 3/16 x 1 ¼”	2
9	750-441-1	Ramp Latch – Straight	2
10	400-112	½” – 13 Lock Nut	2
11	400-027	½” – 13 x 1 ½” HHCS	2
12	750-164-7	Rubber Matting f/7525 Ramp 55” x 7”	4
13	750-438-1	Rubber Matting f/Bed 40” x 7”	2
14	400-255	Elevator Bolt	15
15	750-961-1	Jackstand Pin & Chain	1
16	400-281	5/16” Flanged Lock Nut	12
17	750-434	Drawbar	1
18	750-435	Drawbar Hitch	1
19	400-061	½” – 13 x 3 ½” HHCS	4
20	400-112	½” – 13 Lock Nut 2-way	4
21	40-168	Cotter Pin 1/8 x 1”	4
22	750-436	Ramp Pin	2
23	750-960	Axle	1
24	400-015	3/8” – 16 x 1 ½” HHCS	4
25	400-116	3/8” – 16 Lock Nut	4
26	2027-1	Hub Only	2
27	1187	Lug Nut	8
28	2028-1	Tapered Bearing	4
29	709-126	Spindle Nut	2
30	2024	Grease Cap	2
31	720-043	Cotter Pin 1/8” x 1 ½”	2
32	750-967	Wheel & Tire 18 x 850 – 8 6ply	2
33	750-967-1	Tire 18 x 850 – 8 6ply	2
34	2026	Cargo Wheel	2
35	750-961	Jackstand	1
36	750-435-1	Ball Hitch	1
38	400-202	5/16” Flat Washer	10
40	750-164-8	Rubber Matting f/Bed 63” x 7”	1
41	750-444	Torsion Spring	8
42	750-406-1	Roller Stop	1
*	400-207	5/16” Lock Washer	
*	400-102	5/16” – 18 Hex Nut	

*Part of bolt bag

TRAILER SPRING PLACEMENT

REPLACEMENT PARTS LIST

Replacement Filters

750-300	Hydraulic Oil filter	
943-104	Engine Oil Filter	Briggs and Stratton #492932
41-160	Inline Fuel Filter	
943-100-4	Air Filter Element W/ Pre-Cleaner	Briggs and Stratton #5050

Seal Kit

750-801	Drive Motor
750-801-5	Drive Motor seal kit
750-846	Hydraulic Pump
750-849	Hydraulic Pump Seal Kit
750-804	Steering Orbital
750-804-1	Steering Orbital Seal Kit
943-504	Hydraulic Steering Cylinder
943-504-1	Hydraulic Steering Cylinder Seal Kit

Fluids

Engine Oil	Refer to Engine Manual
Hydraulic Oil	SAE 10W-30 API Service SJ or Higher Engine Oil

Other Parts

750-950	Service Kit Includes: Engine Oil Filter Hydraulic Oil Filer Engine Air Filter Engine Fuel Filter Spark Plugs

Operator's Manual

TOURNAMENT ROLLERS

7020 SN: T9871
7090 SN: T9911
7576 SN: T9829

Revised December, 2024

Product Support: ***1020 Hawaii Rd; Humboldt, KS 66748***
1-888-422-5173 wj@smithco.com

TABLE OF CONTENTS

TITLE	PAGE
Introduction	
Introduction	1-2
Specifications	3-5
Symbols	6-7
Safe Practices	8
Controls & Instruments for 7020, 7090 & 7576	9
Operation	10
Daily Checklist for 7020, 7090 & 7576	11
Service	
Maintenance	12-14
Engine Service Chart	15
End User's Service Chart	16
Service Chart	17
Storage	18
Smithco Warranty	19-20

SMITHCO TOURNAMENT ROLLERS

The SMITHCO TOURNAMENT ROLLERS are a field developed tool designed to condition the surface of putting greens, lawn bowling greens, and grass tennis courts to a precise texture for tournament grade quality.

The Roller utilizes two 8” rollers to achieve a “billiard table” surface. Both 8” rollers are driven and both are used for steering.

The TOURNAMENT ROLLER is built of the finest and heaviest material utilized on each part to insure longevity. The frame is fabricated out of seven gauge steel to provide weight to the machine and prevent warping. The steering has been especially engineered for operator comfort to alleviate fatigue during prolonged use. The specially designed, articulated steering rollers allow the rollers to follow the contour of the green to insure an even compaction over the entire surface.

Before placing the Roller into service it must be serviced with fuel and the hydraulic fluid checked. Refer to the manuals furnished for the engine and transmission which will specify fuel and oils required.

Operator familiarization should be conducted before use of the Roller on the greens. Improper handling of the roller could cause damage to the turf. Do not allow the roller to stand idle on the putting surface for any length of time as the weight of the machine will cause indentions that will be difficult to smooth out. Place the roller into motion while off the green, and never attempt to turn the steering rollers sharply while the machine is on the green. Do not attempt to turn the steering wheel while the machine is not in motion.

Each Golf Course Superintendent should plan a pattern for the rolling of his greens so all greens would be compatible in speed and direction. Most Superintendents will probably decide that the best method of rolling would be back and forth in an alternate direction. When possible, the roller should be run up and down major undulations, not across. Each Superintendent can decide as to which method is best for his greens.

The Roller should be lubricated frequently with any grade of machine oil at all moving joints, and the bearings that are furnished with grease fittings should be greased with any good grade Lithium or equivalent water repellent grease. The Hydraulic pump uses 10W30 or 10W40 nondetergent oil.

THE SMITHCO **TOURNAMENT ROLLERS** ARE TO BE USED ON GOLF COURSE GREENS, LAWN BOWLING AREAS AND GRASS TENNIS COURTS **ONLY.** IT IS NOT TO BE USED ON ASPHALT, CEMENT, OR GRAVEL AREAS.

Good maintenance and regular servicing will insure the longevity of your SMITHCO TOURNAMENT ROLLER. Support is readily available from your local distributor or SMITHCO.

INTRODUCTION

Thank you for purchasing a **SMITHCO** Tournament Roller.

Carefully read this manual and the engine manual as they include safety, operating, assembly and maintenance instructions. Failure to do so could result in personal injury or equipment damage.

Keep manuals in a safe place after operator and maintenance personnel have read them. Right and left sides are from the operator's seat, facing forward.

All **SMITHCO** machines have a Serial Number and Model Number. Both numbers are needed when ordering parts. The serial number plate on the Roller is located on the back of the unit.

For easy access, record your Serial and Model numbers here.

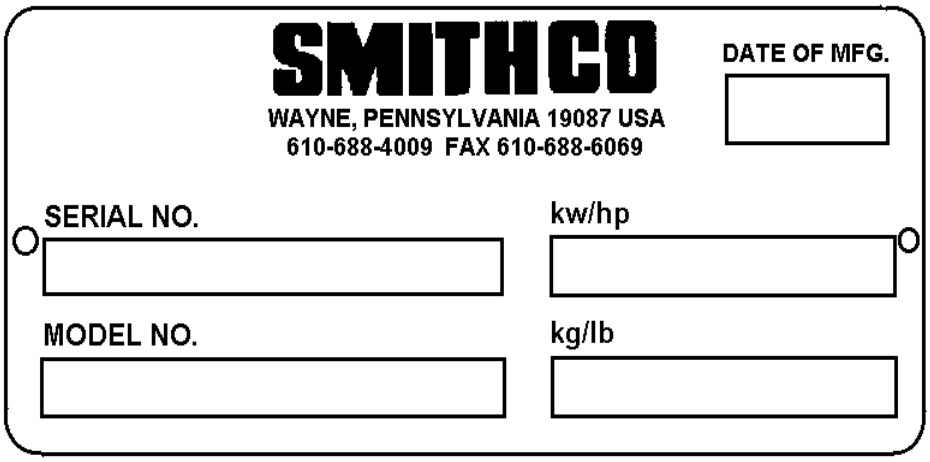

Information needed when ordering replacement parts:

1. Model Number of machine.
2. Serial Number of machine.
3. Name and Part Number of part.
4. Quantity of parts.

TOURNAMENT ULTRA XXL SPECIFICATIONS

TOURNAMENT ULTRA XXL GREENS ROLLER 70”

MODEL 7020

Weights and Measurements

Length	48”
Width	73”
Height	47”
Ground Clearance	7”
Weight	905 lbs.

Ground Pressure
3.81 PSI
Brakes
Braking through hydraulic system
Seat
High back; one piece for operator comfort
Body
Welded steel frame; powder coated
Engine
Make: Vanguard Briggs & Stratton OHV gas engine
Model#: 303447
Type / Spec#: 1131E1
Horsepower: 16 hp (11.9 kW)
Fuel: Unleaded 87 Octane Gasoline Minimum
Cooling System: Air Cooled
Lubrication System: Full Pressure
Alternator: 16 amp
Sound Level
At Ear Level: 72 dB
Electrical System
12-volt electric start
Hydraulic Pump
Hydro gear system
Wheel Motor
(3) Hydro Gear HGM-10P-7182
Drive
Hydrostatic drive to (1) 8” x 36” Roller and (2) 8” x 19” Rollers
Steering
Hydraulic power steering; 16” soft grip steering wheel with tilt; 10’ diameter turning radius
Air Cleaner
Standard
Fuel Tank
5 gallon capacity
Oil Tank
5 gallons **(Note: The roller is shipped with and only requires 3 gallons of oil.)**
Rollers
One 8” x 36” and two 8” x 19” steel powder coated rollers.
Controls
Foot operated with dual control rods.
Speed Control
Patented Speed Boss

Trailer 7525

SPECIFICATIONS

TOURNAMENT ULTRA PLUS ROLLER SPECIFICATIONS

MODEL 7090

Weights and Measurements

Length	52”
Width	49”
Height	47”
Ground Clearance	7”
Weight	880 lbs.

Ground Pressure
4.5 PSI
Brakes
Braking through hydraulic system
Seat
High back; one piece for operator comfort
Body
Welded steel frame; powder coated
Engine
Make: Vanguard Briggs & Stratton OHV gas engine
Model#: 303447
Type / Spec#: 1131E1
Horsepower: 16 hp (11.9 kW)
Fuel: Unleaded 87 Octane Gasoline Minimum
Cooling System: Air Cooled
Lubrication System: Full Pressure
Alternator: 16 amp
Sound Level
At Ear Level: 72 dB
Electrical System
12-volt electric start
Hydraulic Pump
Hydro gear system
Wheel Motor
(2) Hydro Gear HGM-10P-7182
Drive
Hydrostatic drive to (2) 8” rollers with both rollers driven
Steering
Power Steering
Air Cleaner
Standard
Fuel Tank
5 gallon capacity
Oil Tank
5 gallons **(Note: The roller is shipped with and only requires 3 gallons of oil.)**
Rollers
Two 8” steel powder coated rollers 36” long
Controls
Foot operated with dual control rods.
Speed Control
Patented Speed Boss
Trailer 7520

7576 SPECIFICATIONS

TOURNAMENT ULTRA LITE ROLLER SPECIFICATIONS

MODEL 7576

Weights and Measurements

Length	52” – (132 cm)
Width	49” – (125 cm)
Height	47” - (119 cm)
Weight	605 lbs. (275 kg)

Ground Pressure
4 PSI with 175 lb. operator on hard surface
3 PSI with 175 lb. operator on fine turf
Brakes
Dynamic thru hydrostatic drive system
Seat
High back; one piece for operator comfort
Construction
Heavy gauge square steel tubing main frame, hydraulically formed, electrically welded.
Engine
9 HP (6.7kW) Honda
Model#: GX270UT2QA2
Commercial gasoline engine, single cylinder, air-cooled. Engine mounted air cleaner.
Sound Level
90 dbA under normal operating conditions
Electrical System
12-volt system available from the engine while running, no battery
Drive
Hydrostatic using a 16cc Hydraulic Pump driving two (2) hydraulic motors direct coupled to each roller cylinder. Direct drive motors eliminate maintenance; hydraulic drive to both rollers provides superior traction in all turf and terrain conditions.
Steering
Mechanical chain / sprocket, 16” (40cm) automotive type steering wheel
Fuel Tank
1 gallon (3.785L) engine mounted
Oil Tank
1 gallon (3.785L) hydraulic oil tank
Rollers
Two (2) oscillating 8” (20.32cm) x 36” (91cm) length, seamless, drawn over mandrel steel tubes. Bolted hubs with bearings on each end of the rollers.
Controls
Recoil start, engine throttle, choke and fuel on-off on the engine. Dual drive pedals control left / right operation and rolling speed. Pedals connected to hydraulic pump via mechanical linkage.
Speed
Infinitely variable 0 – 7 mph (0-11.3 kph)
Trailer 7520

SYMBOLS

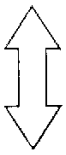
Up/Down Arrow

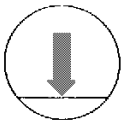
Down/Lower

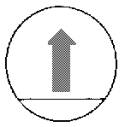
Up/Raise

No Smoking

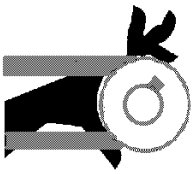
Moving Parts

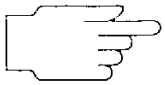
Manual Operation

Pinch Point

Step

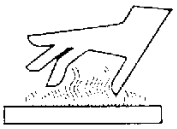
Hot Surface

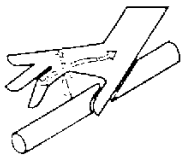
Hydraulic Fluid Penetration

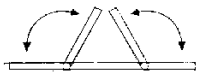
Lift Arm

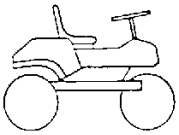
Tractor

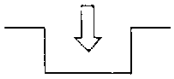
Engage

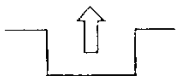
Disengage

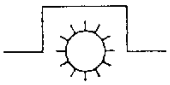
PTO

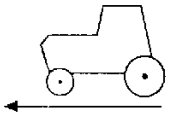
Ground Speed

Fast

Slow

High

Low

Forward

Reverse

Neutral

Warning
Danger
Caution

SYMBOLS

Read Operator's Manual

Electrical Power

No Electrical Power

Engine - Stop

Engine - Start

Engine - Run

Engine Oil

Temperature Light

Water Temperature

1000/mi

RPM

Gasoline

Diesel

Glow Plug-On

Glow Plug - Off

Glow Plug

Hour Meter

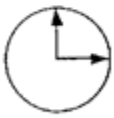
Hour Meter

Fuse

Hand Throttle

Choke - Closed

Choke - Open

Park Brake

Park Brake Release

Hydraulic Oil Level

SAFE PRACTICES

1. **It is your responsibility to read this manual and all publications associated with this machine (engine and accessories).**
2. Never allow anyone to operate or service the machine or its accessories without proper training and instructions. Never allow minors to operate any equipment.
3. Learn the proper use of the machine, the locations and purpose of all the controls before you operate the equipment. Working with unfamiliar equipment can lead to accidents.
4. Wear all the necessary protective clothing and personal safety devises to protect your head, eyes, ears, hands and feet. Operate the machine only in daylight or in good artificial light.
5. Inspect the area where the equipment will be used. Pick up all debris you can find before operating. Beware of overhead obstructions and underground obstacles. Stay alert for hidden hazards.
6. Never operate equipment that is not in perfect working order or without decals, guards, shields, or other protective devices in place.
7. **Never disconnect or bypass any switch.**
8. Carbon monoxide in the exhaust fumes can be fatal when inhaled, never operate a machine without proper ventilation.
9. Fuel is highly flammable, handle with care.
10. Keep engine clean. Allow the engine to cool before storing and always remove the ignition key.
11. After engine has started machine must not move. If movement is evident, the neutral mechanism is not adjusted correctly. Shut engine off and readjust so the machine does not move when in neutral position.
12. Never use your hands to search for oil leaks. Hydraulic fluid under pressure can penetrate the skin and cause serious injury.
13. This machine demands your attention. To prevent loss of control or tipping of the vehicle:
    A. Make sure area is clear. Do not stop or start suddenly on any slope. Avoid driving sideways on hills as much as possible.
    B. Reduce speed on slopes and in sharp turns. Use caution when changing directions on slopes.
    C. Stay alert for holes in the terrain and other hidden hazards.
14. Before leaving operator's position for any reason:
    A. Disengage all drives.
    B. Shut engine off and remove the ignition key.
15. Keep hands, feet and clothing away from moving parts. Wait for all movement to stop before you clean, adjust or service the machine.
16. Keep the area of operation clear of all bystanders.
17. Never carry passengers.
18. Stop engine before making repairs/adjustments or to check or add oil to the crankcase.
19. **Use parts and materials supplied by <u>SMITHCO</u> only. Do not modify any function or part.**

These machines are intended for professional maintenance on grass greens. Other use will void the warranty.

CONTROLS & INSTRUMENTS FOR 7020, 7090 & 7576

IGNITION SWITCH

Located on the left side of opp. platform. This is a three-position ignition switch; Stop – Run – Start.

A. **Choke:** Choke is located on the left side of the opp. platform. Pull choke control knob out to close choke plate when starting a cold engine. A warm engine may not require "choking" to start.

B. **Hand Throttle:** Hand throttle is located on left side of the opp. platform.

C. **Fuse & Fuse Holder:** 30 AMP fuse is used.

STEERING

Acquaint yourself with steering before operating machine. The automotive type steering wheel is connected to the roller assembly by hydraulic steering. This allows for quick turns and short turning radius.

SEAT ADJUSTMENT

Seat adjustment lever is located under front of seat on left side. It provides seat adjustment forward or backward for operator's comfort.

FOOT PEDALS

RIGHT FOOT PEDAL

The right foot pedal is used for going to the right. When the pedal is released the roller will come to a slow stop. To bring the roller to a sudden stop press on the left foot pedal a little to reverse rollers to bring unit to a stop.

LEFT FOOT PEDAL

The left foot pedal is used for going to the left. When the pedal is released the roller will come to a slow stop. To bring the roller to a sudden stop press on the right foot pedal a little to reverse rollers to bring unit to a stop.

OPERATION

STARTING ENGINE

Before operating this machine, become familiar with all controls and functions of these units. Also, complete all maintenance requirements and read all safety warnings. By knowing the machine thoroughly, how it operates and by doing the prescribed maintenance steps, you can expect relatively trouble-free operation for years to come.

1. The ignition switch is a three-position. Insert key and turn clockwise until engine starts (C). Release key and it will return to run position (B). Use choke as necessary.

2. Allow engine to idle and warm up a few minutes.

3. To select a direction, press down on the right or left foot pedal. Always come to a complete stop before going another direction.

4. To shut off engine, turn the key to the “OFF” position.

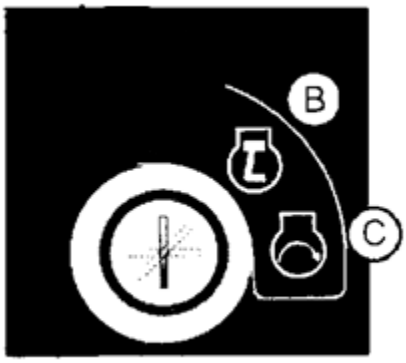

DAILY CHECKLIST FOR 7020, 7090 & 7576

DAILY CHECKLIST

NOTE: **Use all procedures and parts prescribed by the manufacturers. Read the engine manual before operation.**

The suggested maintenance checklist is not offered as a replacement for the manufacturer's list, but as a supplement. You must adhere to guidelines established by manufacturer for warranty coverage. In adverse conditions such as dirt, mud or extreme temperatures, maintenance should be more frequent.

1. Check engine oil level. Add as needed. DO NOT OVERFILL.
2. Examine vehicle for damage or anything unusual to normal wear.
3. Inspect electrical system for loose connections or frayed wiring, including battery cables. Replace any faulty equipment or tighten if loose.
4. Check hardware for loose or missing nuts, bolts, set screws, etc., and tighten or replace as needed.
5. Listen for any noise, such as rattles due to loose hardware, scraping sounds, or unusual motor noises. Be sensitive to abnormal performance.
6. Inspect hydraulic lines for damage or leaks. Never use hands to inspect leaks.
7. Inspect all lubrication areas around pedal shafts, chassis parts, etc.
8. Inspect steering.
9. Assure that all switches are operating normally.
10. Check hydraulic oil. To replenish, use 10W-40 or 10W-30 Motor Oil API Service SG. Do not overfill. Only requires 3 gallons max.
11. Check controls for smooth, proper working operation. Lubricate as needed.
12. Wash accumulated dirt **daily** from motor compartment and under body.

MAINTENANCE

CAUTION

Before servicing or making adjustments to machine, stop engine and remove the key from ignition.

NOTE:

Use all procedures and parts prescribed by the manufactures. Read the engine manual.

AIR CLEANER ON ENGINE

1. Remove the thumbscrews on top of the cover and remove the cover.

2. Carefully remove paper element to prevent debris from entering carburetor. To service, clean by tapping gently on flat surface. Do not oil paper element. Replace if very dirty or damaged.

NOTE: **Do not use petroleum solvents, e.g.., kerosene, which will cause cartridge to deteriorate. Do not use pressurized air to clean cartridge. Pressurized air can damage cartridge.**

3. Reinstall paper element.

4. Replace cover and reattach thumb screws.

ENGINE
Change and add oil according to chart below. Do not overfill. Use a high quality detergent oil. Use no special additives with recommended oils. Do not mix oil with gasoline.

SAE VISCOSITY GRADES

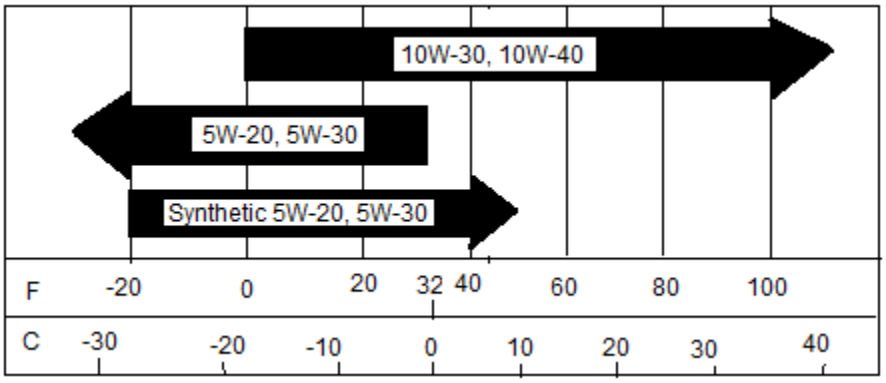

Starting Temperature Range Anticipated Before Next Oil Change

NOTE: Use of multi-viscosity oils (10W-40, etc.) will result in increased oil consumption. Check oil level more frequently if using these types of oils.

JUMP STARTING

WARNING

Use of booster battery and jumper cables: Particular care should be used when connecting a booster battery. Use proper polarity in order to prevent sparks.

To jump start (negative grounded battery):

1. Shield eyes.
2. Connect ends of one cable to positive (+) terminals of each battery, first (A) then (B).
3. Connect one end of other cable to negative (-) terminal of “good” battery (C).
4. Connect other end of cable (D) to engine block on unit being started (NOT to negative (-) terminal of battery)

To prevent damage to other electrical components on unit being started, make certain that engine is at idle speed before disconnecting jumper cables.

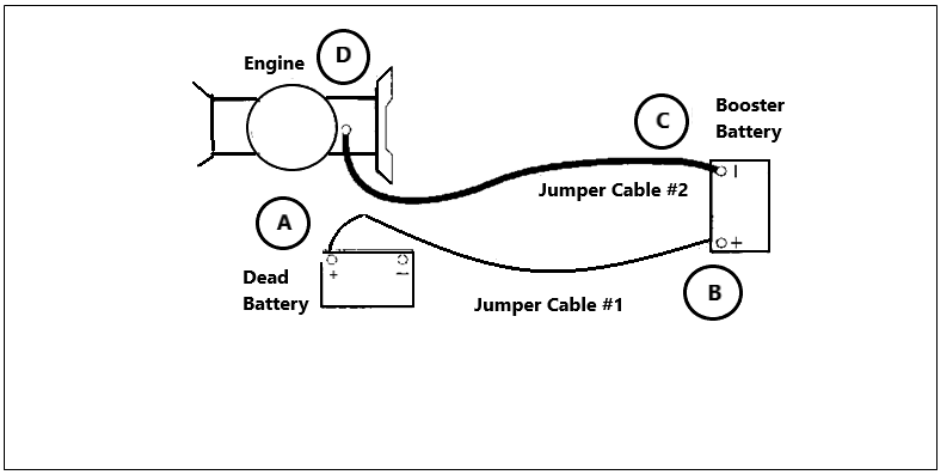

PUMP MAINTENANCE

When installing a new pump or wheel motors, it is recommended that the oil is changed.

After the installation of a new pump or filter, you need to loosen the relief valve 2-3 turns. Start the engine and let it run at high RPM’s for about 2 minutes. After 2 minutes, depress the right foot pedal for 30 seconds to a minute or until both rollers move freely. Do the same on the left side. After you have done this a few times you will need to tighten the relief valve, located on the right side of the pump to about 200 inch lbs.

SERVICE CHART FOR THE ENGINE & HYDRAULIC SYSTEM

CAUTION **Before servicing or making adjustments to the machine, stop engine, set park brake, block wheels and remove key from ignition.**

NOTE: **Follow all procedures and ONLY use parts prescribed by the manufacturer. Read the engine manual before maintenance.**

	Daily	As Required	100 Hours	200 Hours	250 Hours	300 Hours	400 Hours	Every 500 Hours/Yearly
§ Engine Oil	C		R	R		R	R	R
Engine for Leaks and Loose Parts	C		C	C		C	C	C
Air Cleaner (Paper Element)		C	C	C		C	C	R
tt Spark Plugs		R		C			C	R
Idle Speed					C			C
§ Hydraulic Oil 10W30	C		R		C	R		C
Fuel Level	C	C						
Fuel Filter		R						R
Battery Electrolyte Level			C	C		C	C	C
Clean Battery Terminals					C			C
Lubricate			C	C		C	C	C

C = Check or Clean at specified intervals
R = Replace at specified intervals
T = Torque tire nuts after the first 10 hours and every 200 hours there after (64 to 74 ft/lb (87-100 NM)
§ Change oil and filter after first 5 hours.
tt Gap .03 (.76 mm) Torque to 18-22 ft/lb (24-30 Nm)
Clean more often under dusty conditions or when airborne debris is present, replace air cleaner parts, if very dirty.

The suggested maintenance checklist is not offered as a replacement for the manufacturer's engine manual but as a supplement. You must adhere to the guidelines established by the manufacturer for warranty coverage. In adverse conditions such as dirt, mud or extreme temperatures, maintenance should be more frequent.

END USER'S SERVICE CHART FOR THE ENGINE & HYDRAULIC SYSTEM

	Daily	As Required	100 Hours	200 Hours	250 Hours	300 Hours	400 Hours	Every 500 Hours/Yearly
§ Engine Oil								
Engine for Leaks and Loose Parts								
Air Cleaner (Paper Element)								
tt Spark Plugs								
Idle Speed								
§ Hydraulic Oil 10W30								
Fuel Level								
Fuel Filter								
Battery Electrolyte Level								
Clean Battery Terminals								
Lubricate								

C = Check or Clean at specified intervals
R = Replace at specified intervals
T = Torque tire nuts after the first 10 hours and every 200 hours there after (64 to 74 ft/lb (87-100 NM)
§ Change oil and filter after first 5 hours.
tt Gap .03 (.76 mm) Torque to 18-22 ft/lb (24-30 Nm)
Clean more often under dusty conditions or when airborne debris is present, replace air cleaner parts, if very dirty.

SERVICE CHART

CAUTION **Before servicing or making adjustments to the machine, stop engine, set park brake, block wheels and remove key from ignition.**

NOTE: **Follow all procedures and ONLY use parts prescribed by the manufacturer. Read the engine manual before maintenance.**

	Daily	50 Hours	100 Hours	200 Hours	250 Hours	300 Hours	400 Hours	Every 500 Hours/Yearly
Bearings		C						
Chains and sprockets	C							
All hydraulic fittings and hoses	C	T						
All nuts and bolts		C						
All oil filters		C	R					
All control cables		C						
Check trailer		C						

C = Check or Clean at specified intervals
R = Replace at specified intervals
T = Torque (35 ft lb)
S = Change oil and filter after first 5 hours
Clean more often under dusty conditions or when airborne debris is present, replace air cleaner parts if very dirty.

STORAGE

7020, 7090 & 7576 STORAGE

When storing, remove the key from the key switch to avoid unauthorized persons from operating machine.

1. Before storing, clean machine thoroughly.

2. Check bolts and nuts, tighten as necessary.

3. Make all repairs that are needed and remove any debris.

4. Remove the battery, adjust the electrolyte level and recharge it. Store the battery in a dry, dark place.

5. Store in a clean and dry area, but NOT near a stove, furnace or water heater which uses a pilot light or any device that can create a spark.

6. Engines stored over 30 days need to be protected or drained of fuel to prevent gum from forming in a fuel system or on essential carburetor parts. Check the engine manual and follow the instructions for the storage of the engine.

The Smithco Commercial Products Two-Year Limited Warranty

Smithco, Inc. (Smithco) warrants your 2016 or newer Smithco Commercial Product ("Product") purchased after October 1, 2016 to be free from defects in materials or workmanship for the period of time listed below. Where a warrantable condition exists, Smithco will repair the Product at no cost to you including diagnosis, labor (at the Smithco standard labor rate, subject to the Smithco flat rate schedule), and parts.

Warranty Duration Is:

1. **Two years, 1500 operational hours* from the date of delivery to the original purchaser or five years from the date of original manufacturer of the product, whichever occurs first. (*Products equipped with hour meter).**

2. **Products used in rental situations are covered for 90 days from date of delivery to original user/renter.**

Owner responsibilities:

As the Product owner, you are responsible for required maintenance and adjustments stated in your Owner's Manual. Failure to perform required maintenance and adjustments can be grounds for disallowing a warranty claim. **You are particularly responsible to train all present and future operators of this product on the safe operation of this product at your location.**

Instructions for Obtaining Warranty Service:

You are responsible for notifying the Authorized Smithco Products Distributor from whom you purchased the Product as soon as you believe a warrantable condition exists and not later than 30 days from discovery of the condition.

If you need help locating an Authorized Smithco Distributor, or if you have questions regarding your warranty rights or responsibilities, you may contact us at:

Smithco Product Support Department
Highway SS @ Poplar St.
Cameron, Wisconsin 54822
Telephone: 715-458-4192 E-Mail: ProductSupport@Smithco.com

Maintenance Parts:

Parts scheduled for replacement as required maintenance ("Maintenance Parts"), are warranted for the period of time up to the scheduled replacement time for that part.

Items/Conditions Not Covered:

Not all product failures or malfunctions that occur during the warranty period are defects in materials or workmanship. The items/conditions listed below are not covered by this warranty.

- Product failures which result from the use of non-Smithco replacement parts, or from installation and use of add-on, modified, or unapproved accessories are not covered.

- Product failures which result from failure to perform required maintenance and/or adjustments are not covered.

- Product failures that result from operating the Product in an abusive, negligent or reckless manner are not covered.

- This warranty does not apply to parts subject to consumption through use, unless found to be defective. Examples of parts which are consumed, or used up during normal Product operation include, but are not limited to: blades, tines, teeth, scarifiers, rakes, plates, wear plates, castor wheels, tires, batteries, filters, belts, nozzles, etc.

- This warranty does not apply to failures caused by outside influence. Items considered to be outside influence include, but are not limited to, weather, storage practices, contamination, use of unapproved coolants, lubricants, additives, or chemicals, etc.

- This warranty does not apply to normal “wear and tear” items. Normal “Wear and Tear” includes, but is not limited to, damage to seats due to wear or abrasion, worn painted surfaces, scratched decals or windows, etc.

- Smithco may require the return of failed parts or components in order determine the validity of any warranty claim.

- Smithco will not be obligated to replace components of other manufacturers if inspection by the original component manufacturer indicates that failure was due to normal wear and tear, expected consumption through use or improper care or service.

Other Legal Disclaimers:

The above remedy for product defects through repair or replacement by an authorized Smithco distributor or dealer is the purchaser’s sole remedy for any defect. This warranty gives you specific legal rights, and you may also have other rights which vary from state to state.

THERE ARE NO OTHER EXPRESS WARRANTIES OTHER THAN THOSE SET FORTH ABOVE. ALL IMPLIED WARRANTIES OF MERCHANTABLILITY AND FITNESS FOR USE ARE LIMITED TO THE DURATION OF THE LIMITED WARRANTIES CONTAINED HEREIN.

Some States may not allow limitations on how long an implied warranty lasts, so the above limitation may not apply to you.

THE SMITHCO COMPANY IS NOT LIABLE FOR INDIRECT, INCIDENTAL OR CONSEQUENTIAL DAMAGES IN CONNECTION WITH THE USE OF THE PRODUCT, INCLUDING ANY COST OR EXPENSE OF PROVIDING A SUBSTITIUTE PRODUCT OR SERVICE DURING PERIODS OF MALFUNCTION OR NON-USE.

Some states may not allow the exclusion of indirect, incidental or consequential damages, so the above exclusion may not apply to you.

Smithco neither assumes, nor authorizes any person to assume for it, any other liability in connection with the sale or use of this product.

SMITHCO, INC.
WANYE, PA 19087

SMITHCO