Parts Manual

35HP SweepStar 60 Quad

Model 76-800-A

SN: 60Q2598

January 2026

Brush/ Finger Reel is pinned in transport position

Product Support: ***Hwy 55 & Poplar Ave; Cameron WI 54822***
1-800-891-9435 ***productsupport@smithco.com***

CONTENTS

Introduction **1-3**
Safe Practices 2
Specifications 3
Optional Equipment 3
Service **4-9**
Maintenance 4-6
Service Chart 7-8
Adjustments 9
Storage 9
Diagrams **10-13**
Wiring Diagram 10-11
Hydraulic Diagram 12-13
Parts **14-56**
Main Drawing 14-15
Steering 16-17
Front Axle 18-19
Foot Pedal Linkage 20-21
Seat 22-23
Oil Tank & Gas Tank 24-25
ROPs 26-27
Reel lift 28-31
Finger & Brush Reel 32-33
Engine and Exhaust 34-35
Hydro & Gear Pump 36-37
Reel Belt Drive 38-39
Rear Axle 40-41
Hopper Lift Cylinder 42
Reel Lift Cylinder 43
Hopper 44-47
Tailgate 48
Tailgate Cylinder 49
48-267 Hydrostatic Pump 50-51
48-266 Gear Pump 52
76-238 Rear Wheel Motor 53
34-103 Power Steering Orbitol 54-55
76-673 3-Bank Valve 56
Accessory **58-59**
76-751 Dust/Dirt Filtration Pack 58-59
Reference **60-62**
Decal List 60-61
Quick Reference Replacement Parts 62

INTRODUCTION

Thank you for purchasing a ***Smithco*** product.

Read this manual and all other manuals pertaining to the Sweeper carefully as they contain safety, operating, assembly and maintenance instructions. Failure to do so could result in personal injury or equipment damage.

Copies of manuals are available online at **https://manuals.smithco.com**

Right and left sides are from the operator's seat, facing forward.

WARNING

Failure to follow cautious operating practices can result in serious injury to the operator or other persons. The owner must understand these instructions, and must allow only trained persons who understand these instructions to operate this vehicle.

All ***Smithco*** machines have a Serial Number and Model Number. Both numbers are needed when ordering parts. Serial tag is located on the left side frame. Refer to engine manual for placement of engine serial number.

For product and accessory information, help finding a dealer, or to register your product please contact us at **www.Smithco.com.**

Information needed when ordering replacement parts:

1. Model Number of machine
2. Serial Number of machine
3. Name and Part Number of part
4. Quantity of parts

For easy access record your Serial and Model numbers here.

Model Number: _____

Serial Number: _____

Date of Purchase: _____

SMITHCO CUSTOMER SERVICE 1-800-891-9435

SAFE PRACTICES

1. It is your responsibility to read this manual and all publications associated with this machine (engine, accessories and attachments).
2. Never allow anyone to operate or service the machine or its attachments without proper training and instructions. Never allow minors to operate any equipment.
3. Learn the proper use of the machine, the location and purpose of all the controls and gages before you operate the equipment. Working with unfamiliar equipment can lead to accidents.
4. Wear all the necessary protective clothing and personal safety devises to protect your head, eyes, ears, hands and feet. Operate the machine only in daylight or in good artificial light.
5. **SEATBELT IS REQUIRED.**
6. Inspect the area where the equipment will be used. Beware of overhead obstructions and underground obstacles. Stay alert for hidden hazards.
7. Never operate equipment that is not in perfect working order or without decals, guards, shields, or other protective devices in place.
8. Never disconnect or bypass any switch.
9. Carbon monoxide in the exhaust fumes can be fatal when inhaled, never operate a machine without proper ventilation.
10. Fuel is highly flammable, handle with care. When filling tank stop 1 inch(2.54 cm) from top. Leave room for expansion. **DO NOT OVERFILL.**
11. Keep engine clean. Allow the engine to cool before storing and always remove the ignition key.
12. Never use your hands to search for oil leaks. Hydraulic fluid under pressure can penetrate the skin and cause serious injury.
13. This machine demands your attention. To prevent loss of control or tipping of the vehicle:
    - A. Use extra caution in backing up the vehicle. Ensure area is clear.
    - B. Do not stop or start suddenly on any slope.
    - C. Reduce speed on slopes and in sharp turns. Use caution when changing directions on slopes.
    - D. Stay alert for holes in the terrain and other hidden hazards.
    - E. Run up and down slopes, never across the face.
14. Before leaving operator's position for any reason:
    - A Disengage all drives.
    - B. Lower all attachments to the ground.
    - C. Shut engine off and remove the ignition key.
15. Keep hands, feet and clothing away from moving parts. Shut off engine, remove key and wait for all movement to stop before you clean, adjust or service the machine.
16. The rubber fingers and sweeper reel pick up and propel debris and small objects in its path during operation. Keep the area of operation clear of all bystanders.
17. Never carry passengers.
18. Stop engine before making repairs/adjustments or checking/adding oil to the crankcase.
19. Use parts and materials supplied by SMITHCO only. Do not modify any function or part.
20. Avoid sharp turns.
21. Shut down power source before attempting to unclog any part of the machine.
22. If reel deck begins to vibrate abnormally, immediately shut off power and determine the cause.

These machines are intended for operation by well trained persons performing professional maintenance on golf courses, sports turf, and any other area maintained turf and related trails, paths and lots. No guaranty as to the suitability for any task is expressed or implied.

SPECIFICATIONS FOR SWEEP STAR

WEIGHTS AND DIMENSIONS	
Length	146" (371cm)
Width	74.5" (179 cm)
Height with Hopper Down	84" (214 cm)
Height with Hopper Up	124" (315 cm)
Wheel Base	67" (170 cm)
Weight	2500 lbs (1134 kg)
ROLL OVER PROTECTION BAR WITH SEAT BELTS	
Certified ROPS with Seat Belts	ISO 21299:2009/ISO 3776-2:2013
SOUND LEVEL	**GAS ENGINE**
At ear level	90 dB
At 3 ft (0.914 m)	93 dB
At 30 ft (9.14 m)	81 dB
ENGINE	**GAS**
Make	Briggs & Stratton
Model#	613477
Type / Spec#	4246-J1
Horsepower	35 Hp (26 kw)
Fuel	Unleaded 87 Octane Gasoline Minimum
Cooling System	Air Cooled
Lubrication System	Full Pressure
Alternator	24 Amp
Tire & Wheels	Front: Two 22 x 11.00 x 10 Turf-trac 20psi (1.4 bar)
	Rear: Two 24 x 13.00 x 12 Super Soft (18 psi; 1.3 bar)
SPEED	
Infinitely Variable	0-10 mph (0-16 kph)
BATTERY	Automotive type 24F -12 volt
BCI Group	Size 24F
Cold Cranking Amps	4600minimum
Ground Terminal Polarity	Negative (-)
Maximum Length	10.25" (26 cm)
Maximum Width	6.88" (17 cm)
Maximum Height	10.00" (25 cm)
FLUID CAPACITY	
Crankcase Oil	See Engine Manual
Fuel	10 gallon (37,9 liters)
Hydraulic Fluid	5 gallon (18,9 liters)
Grade of Hydraulic Fluid	SAE 10W-40 API Service SJ or higher Motor Oil

OPTIONAL EQUIPMENT

76-751-K	Dust/Dirt Filtration System
76-665-A	Rubber Finger Puller Kit

MAINTENANCE

LUBRICATION

Use No. 2 General Purpose Lithium Base Grease and lubricate every 100 hours. The Sweep Star has 14 grease fittings.

REF	LOCATION
A.	One on each forward and reverse pedal.
B.	One on front steering cylinder.
C.	One on each front steering spindle.
D.	One on each end of steering tie rod.
E.	One on the outside of each tower.
F.	One on each pillow block bearing on end of reel.
G.	One on rod end of the tailgate cylinder.
H.	One on each tailgate hinge straps.

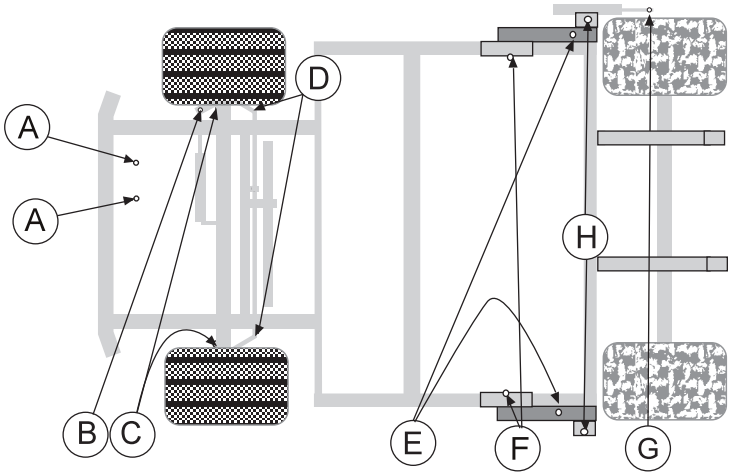

Every 500 hours of operation, separate the hydrostatic pump from the engine. Clean the splined areas and lightly grease the male portion of the pump spline. Use either Dow Corning® G-N Metal Assembly Paste or #77 Assembly Paste.

As you remount the pump to the engine, be certain the mating surface are clean and free of any foreign material and that the pump is correctly aligned.

AIR CLEANER ON ENGINE

1. Unclip the two clips, remove the cover and pull out the element.
2. To service, clean by tapping gently on flat surface. Do not oil. Replace if very dirty or damaged.
3. Clean out the inside of the body and cover.
4. Place the element into the body and put the cover back on..

⚠ IMPORTANT **Do not use petroleum solvents, e.g.., kerosene, which will cause cartridge to deteriorate. Do not use pressurized air to clean cartridge. Pressurized air can damage cartridge.**

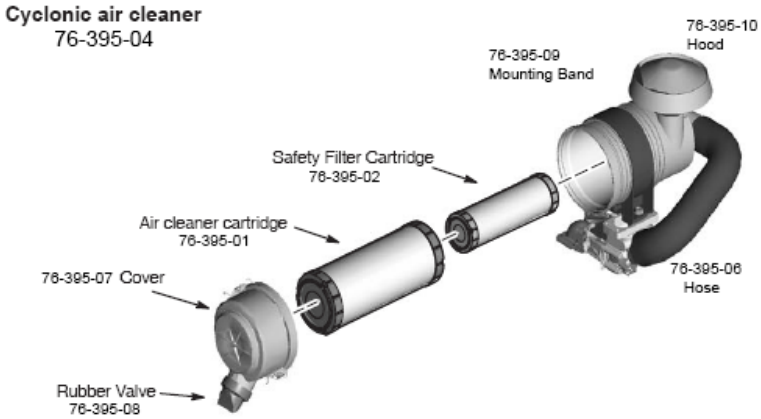

FILTER SYSTEM

Filter pack may be cleaned by shaking or spraying off with low pressure water. Filter will disintegrate with high pressure water used on it.

ENGINE OIL

Change and add oil according to chart below based on air temperature at the time of operation. Do not overfill. Use a high-quality detergent oil classified for service SF, SG, SH. SJ or higher. Use no special additives with recommended oils. Do not mix oil with gasoline.

SAE Viscosity Grades

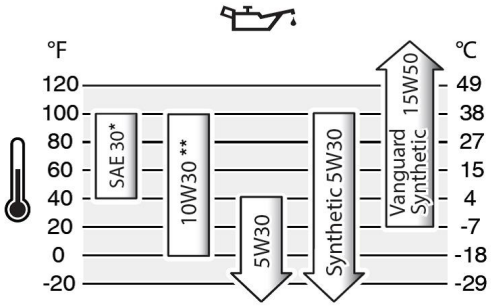

Starting Temperature Range Anticipated Before Next Oil Change

HYDRAULIC OIL

1. Use SAE 10W-40 API Service SJ or higher motor oil.
2. For proper warranty, change oil every 500 hours or annually, which ever is first and change the filter after the first 50 hours, then every 250 hours thereafter.
3. The oil level should be 2" to $2^1/_2$" from top of the tank when fluid is cold. Do not overfill.
4. After changing oil and/or filter, run the machine for a few minutes. Check oil level and for leaks.
5. Always use caution when filling hydraulic oil tank or checking level to keep system free of contaminants. Check and service more frequently when operating in extremely cold, hot or dusty conditions.
6. If natural color of fluid is now black or smells burnt, it is possible that an overheating problem exists.
7. If fluid becomes milky, water contamination may be a problem.
8. If either of the above conditions happen, change oil and filter immediately after fluid is cool and find cause. Take fluid level readings when system is cold.
9. In extreme temperatures you can use straight weight oil. We recommend SAE 30W API Service SJ or higher when hot (above 90°F (33°C)) and SAE 10W API Service SJ or higher when cold (below 32°F (0°C)) ambient temperature. Use either motor oil or hydraulic oil, but do not mix.
10. Oil being added to the system must be the same as what is already in the tank. Mark tank fill area as to which type you put in.

TOWING

When it is necessary to move the Sweep Star without engine running, the bypass valve built into hydrostatic pump must be “open” by turning it counterclockwise. The valve is located on bottom left of pump. An “open” valve allows fluid to pass through the wheels freely. When normal, driven, operation is desired, valve should be closed by turning it clockwise. Failure to “close” the valve with engine running means no power to wheels.

TIRE PRESSURE

⚠ CAUTION

Caution must be used when inflating a low tire to recommended pressure. Over inflating can cause tires to explode. Front tires should be 20 psi (1.4 bar), rear tires and rear tires should be 18 psi (1.3 bar) maximum. Improper inflation will reduce tire life considerably.

WHEEL MOUNTING PROCEDURE

1. Set park brake. Turn machine off and remove key.
2. Block wheel on opposite corner
3. Loosen nuts slightly on wheel to be removed.
4. Jack up machine being careful not to damage underside of machine.
5. Remove nuts, remove wheel.
6. Place new wheel on hub lining up Hex Bolt holes.
7. Torque nuts to 64-74 ft/lb (87-100 Nm) using a cross pattern. Torque again after first 8 hours and every 200 hours thereafter.
8. Lower machine to ground and remove blocks and jack.

BATTERY

Batteries normally produce explosive gases which can cause personal injury. Do not allow flames, sparks or any ignited object to come near the battery. When charging or working near battery, always shield your eyes and always provide proper ventilation.

Battery cable should be disconnected before using “Fast Charge”.

Charge battery at 15 amps for 10 minutes or 7 amps for 30 minutes. Do not exceed the recommended charging rate. If electrolyte starts boiling over, decrease charging.

Always remove grounded (-) battery clamp first and replace it last. Avoid hazards by:

1. Filling batteries in well-ventilated areas.
2. Wear eye protection and rubber gloves.
3. Avoid breathing fumes when electrolyte is added.
4. Avoid spilling or dripping electrolyte.

⚠ WARNING **Battery Electrolyte is an acidic solution and should be handled with care. If electrolyte is splashed on any part of your body, flush all contact areas immediately with liberal amounts of water. Get medical attention immediately.**

⚠ WARNING **Use of booster battery and jumper cables. Particular care should be used when connecting a booster battery. Use proper polarity in order to prevent sparks.**

JUMP STARTING

To jump start (negative grounded battery):

1. Shield eyes.
2. Connect ends of one cable to positive (+) terminals of each battery, first (A) then (B).
3. Connect one end of other cable to negative (-) terminal of "good" battery (C).
4. Connect other end of cable (D) to engine block on unit being started (NOT to negative (-) terminal of battery)

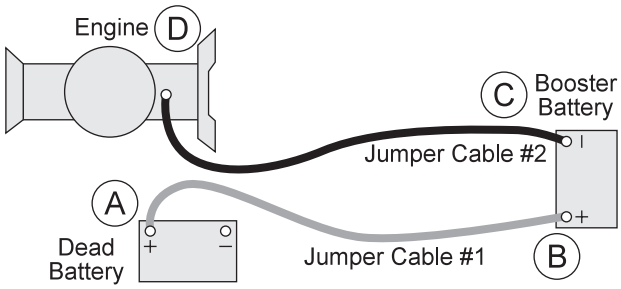

To prevent damage to other electrical components on unit being started, make certain that engine is at idle speed before disconnecting jumper cables.

⚠ CAUTION **Before servicing or making adjustments to the machine, stop engine, set park break, block wheels and remove key from ignition.**

⚠ IMPORTANT **Follow all procedures and ONLY use parts prescribed by the manufacturer. Read the engine manual before maintenance.**

The suggested maintenance checklist is not offered as a replacement for the manufacturer's engine manual but as a supplement. You must adhere to the guidelines established by the manufacturer for warranty coverage. In adverse conditions such as dirt, mud or extreme temperatures, maintenance should be more frequent.

Maintenance Service Interval	Maintenance Procedure
After the first 8 operating hours	Torque the wheel lug nuts. (64-74 ft/lb (87-100 Nm))
	Change the engine oil filter.
Before each use daily	Check the engine oil level.
	Clean area around muffler, engine screen and controls.
	Check the hydraulic fluid level.
	Check the tire pressure.
	Check and clean Debris Filter Pack1
	Check condition of hydraulic hoses and fittings.
	Inspect and clean the machine.
After the first 50 hours	Change Hydraulic Oil Filter.
Every 100 hours	Clean or change air filter.1&2
	Clean pre-cleaner.1
	Change engine oil and filter.
	Replace spark plug .
	Lubricate machine.
	Clean or change remote air cleaner.
	Check the battery fluid level and cable connections..
	Service exhaust system.
	Check belt tension .
Every 250 hours	Check engine valve clearance and adjust if necessary.
	Check idle speed.
	Clean battery terminals.
	Change hydraulic oil filter.
	Torque the wheel lug nuts. (64-74 ft/lb (87-100 Nm))
Every 500 hours or yearly	Change fuel filter.
	Change hydraulic oil and filter.
	Clean oil cooler fins.1
	Replace air filter2
	Replace fuel filter
	Clean air cooling system.1
	Check safety filter in remote air cleaner.
1 In dusty conditions or when airborne debris is present, clean more often.	
2 Every third air filter change, replace the inner safety filter.	

END USER SERVICE CHART

Service

Maintenance Check Item	For the week of:						
	Mon	Tues.	Wed.	Thurs.	Fri.	Sat.	Sun.
Check the Safety Seat Switch							
Check Steering Operation							
Check the fuel level							
Check the engine oil level.							
Clean the air filter							
Clean the engine cooling fins.							
Check for unusual engine noises							
Check the hydraulic oil level							
Check hydraulic hoses and fittings for damage							
Check for fluid leaks.							
Check the tire pressure							
Check the Instrumentation							
Inspect electrical system for frayed wires							
Check park brake adjustment							
Change oil filter.							
Change oil.							
Lubricate Machine							
Ensure all warning decals are intact.							
Areas of Concern							
Inspection Performed by:							

Item	Date	Information

ADJUSTMENTS

SWEEPING

While sweeping, close tailgate frequently to ensure tailgate does not creep open.

While operating the Sweep Star's sweeper head, it is important to disengage the head before raising. If the sweeper head is raised while it is engaged, it can cause the belt to slip off the pulleys. This can result in belt failure and engine crankshaft failure. To ensure a long life of your sweeper, disengage sweeper head before raising..

⚠ CAUTION **Disengage the sweeper head before raising.**

PARK BRAKE ADJUSTMENT

By turning knob on end of park brake lever you can tighten or loosen brake a small amount. To tighten turn the knob clockwise. To loosen turn counter clockwise. If this is not enough turn clevis on brake cable to adjust length of cable.

WHEEL 'CREEP' ADJUSTMENT

'Creep' is when engine is running and hydrostatic transmission is in neutral, but due to inadequate alignment, wheels still move. Do the following procedures to stop this motion.

1. Lift up and support the unit so rear wheels are off the ground and can turn freely.
2. On the bottom of hydrostatic pump is the control arm (A). The control arm is hooked to the bottom of the pump and the foot pedal control link (E). It comes up through the slot on the centering mount (D).
3. Loosen the carriage bolt (C) holding the creep arm (B). Leave finger tight.
4. With engine running, slide the control arm (A) in the slot until it centers on creep arm(B) and wheel 'creep' stops.
5. Tighten all fasteners and test by using foot pedal control link (E) to see that the 'creep' is removed.
6. Turn the engine off and lower the machine.

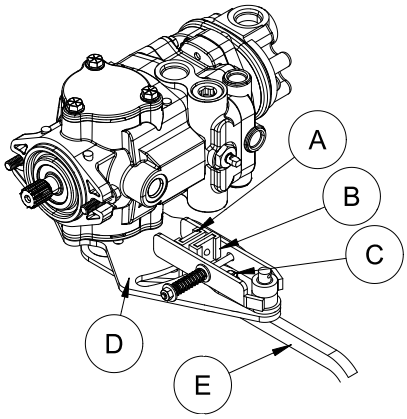

STORAGE

When storing, remove the key from the key switch to avoid unauthorized persons from operating machine.

1. Before storing clean machine thoroughly.
2. Check bolts and nuts, tighten as necessary.
3. Make all repairs that are needed and remove any debris.
4. Remove the battery, adjust the electrolyte level and recharge it. Store the battery in a dry, dark place.
5. Store in a clean and dry area, but NOT near a stove, furnace or water heater which uses a pilot light or any device that can create a spark.
6. Engines stored over 30 days need to be protected or drained of fuel to prevent gum from forming in a fuel system or on essential carburetor parts. Check the engine manual and follow the instructions for the storage of the engine.

WIRING DIAGRAM

Color Code Chart	
Bl	Blue
Br	Brown
Y	Yellow
G	Green
O	Orange
R	Red
B	Black
GY	Gray
W	White

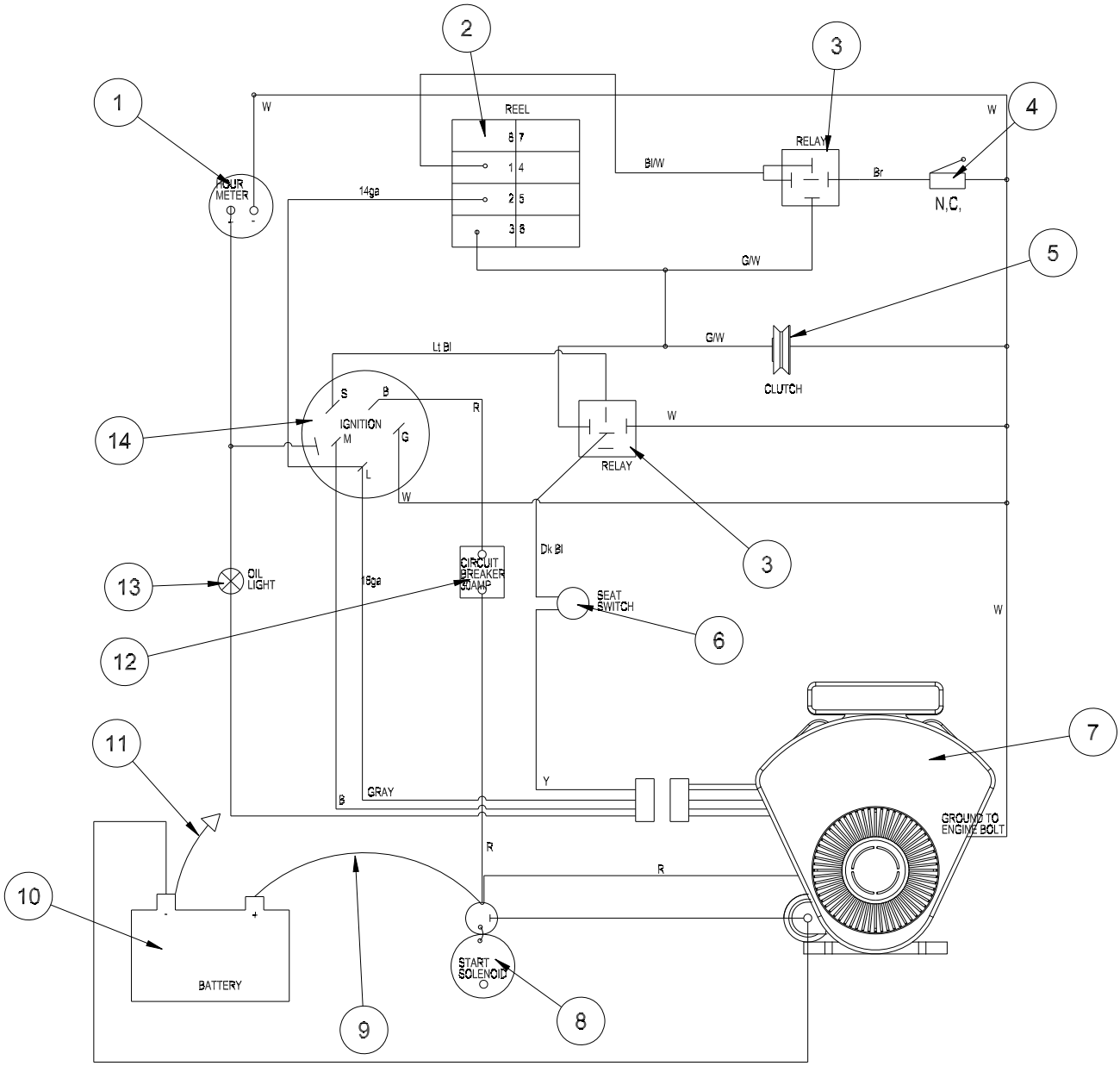

REF#	PART#	DESCRIPTION	QUANTITY
1	12-804	Hour Meter	1
2	10-514	Rocker Switch	1
	15-727	Rocker, No light	1
3	30-042-06	Relay	2
4	20-081	Limit Switch	1
5	76-857	Electric Clutch	1
6	14-292	Seat Switch	1
7	76-749	Engine, B&S 35 HP	1
8		Starter	1
9	76-327	Black Battery Cable	1
10	22-073	Battery	1
11	48-157	Red Battery Cable	1
12	8975	Circuit Breaker, 30 AMP	1
	8977	Circuit Breaker Boot	1
13	50-359	Oil Light	1
14	13-488	Ignition Switch	1
	76-786	Main Wire Harness	1

HYDRAULIC DIAGRAM

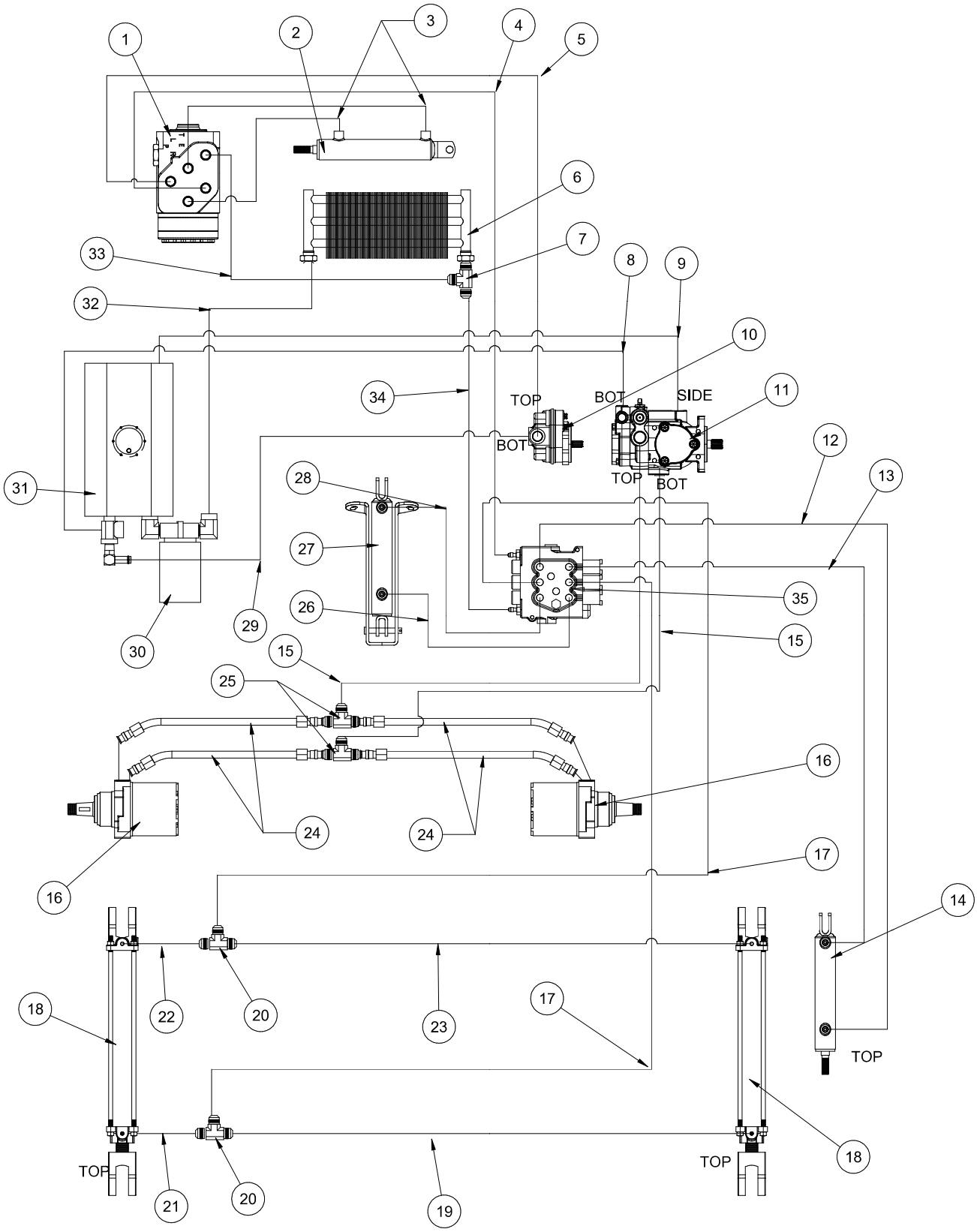

HYDRAULIC DIAGRAM PARTS LIST

REF#	PART#	DESCRIPTION	QUANTITY
1	34-103	Orbitol	1
2	15-839	Steering Cylinder	1
	15-839-01	Seal Kit	1
3	76-770	Hydraulic Hose , 65"	2
4	76-772	Hydraulic Hose, 59"	1
5	76-769	Hydraulic Hose, 78"	1
6	23-172	Oil Cooler	1
	76-458	Cooler Mount Kit	2
7	18-190	Tee	1
8	8832	¾" Suction Hose	15"
	18-040	Hose Clamp	2
9	8810	⅝" Hose	32"
	18-040	Hose Clamp	2
10	48-266	Gear Pump	1
	76-197-08	Seal Kit	1
11	48-267	Hydraulic Pump	1
	77-239-22	Seal Kit	1
12	76-783	Hydraulic Hose, 165"	1
13	76-784	Hydraulic Hose, 171"	1
14	77-263	Tailgate Cylinder	1
	14-530	Seal Kit	1
15	76-774	Hydraulic Hose, 112"	2
16	76-238	Wheel Motor	2
	14-080	Seal Kit	1
17	76-782	Hydraulic Hose, 74.5"	2
18	76-627	Hopper Cylinder	2
19	76-778	Hydraulic Hose, 86"	1
20	18-173	Tee, ⅜" Union	2
21	76-780	Hydraulic Hose, 21.5"	1
22	76-781	Hydraulic Hose,7"	1
23	76-779	Hydraulic Hose, 71.5"	1
24	20-656	Hydraulic Tube Assembly	4
25	34-057	Tee	2
26	76-777	Hydraulic Hose, 50"	1
27	76-478	Reel Cylinder	1
	14-531	Seal Kit	1
28	76-776	Hydraulic Hose, 40"	1
29	8832	¾" Suction Hose	15"
	18-040	Hose Clamp	2
30	23-006	Oil Filer	1
	23-031	Replacement Filter Element	1
31	60-473	Oil Tank	1
32	8810	⅝" Hose	19"
	18-040	Hose Clamp	2
33	76-771	Hydraulic Hose, 64"	1
34	76-773	Hydraulic Hose, 21"	1
35	76-673	3-Bank Valve	1

MAIN DRAWING

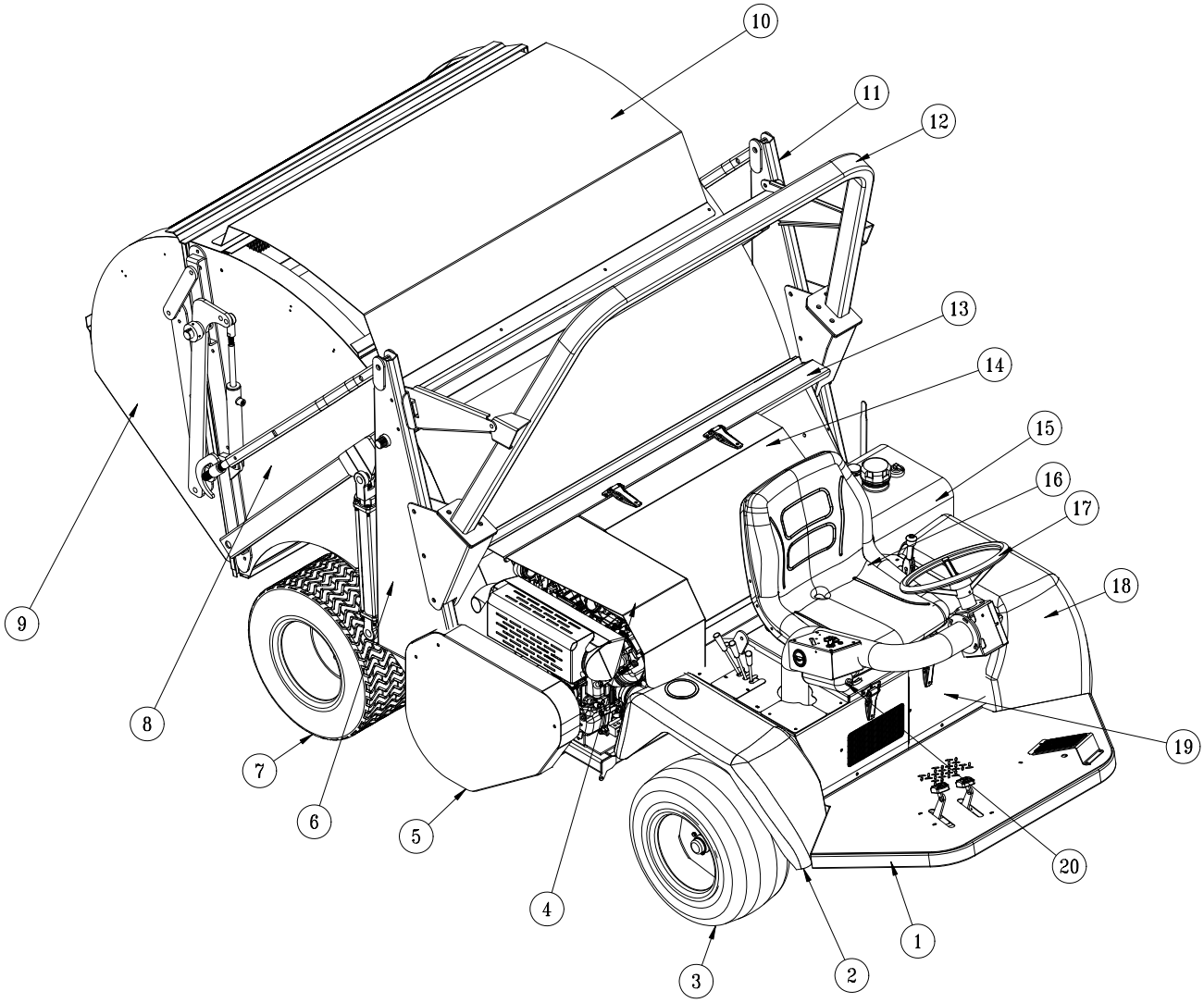

Parts

REF#	PART#	DESCRIPTION	QUANTITY
1	76-801	Main Frame	1
2	30-404	RH Front Fender	1
	10-824	RH Fender Support	1
	15-781	Cup Holder	1
3	43-124	Turf Tread Tire and Wheel	2
	43-123-01P	Tire	2
	43-058-01P	Wheel	2
4	76-839	Engine Housing	1
5	76-813	Belt Cover	1
6	75-561	RH Tower	1
7	16-225	Tire and Wheel	2
	16-225-01P	Tire	2
	16-225-02P	Wheel	2
8	76-237	Hopper	1
9	76-243	Tailgate	1
10	76-359	Hopper Screen Cover	1
11	75-629	LH Tower	1
12	76-810	Roll Over Protection	1
13	76-845	Debris Shield	1
14	76-840	Rear Cover	1
15	20-692	10 Gallon Fuel Tank	1
16	14-294	Seat Kit	1
	HNFL-516-18	Flange Whiz-loc Nut, 5⁄16-18	4
	14-292	Seat Switch	1
17	21-498	Steering Wheel	1
18	30-405	LH Front Fender	1
19	76-803	Seat Frame	1
20	76-354	Fire Extinguisher	1

STEERING DRAWING

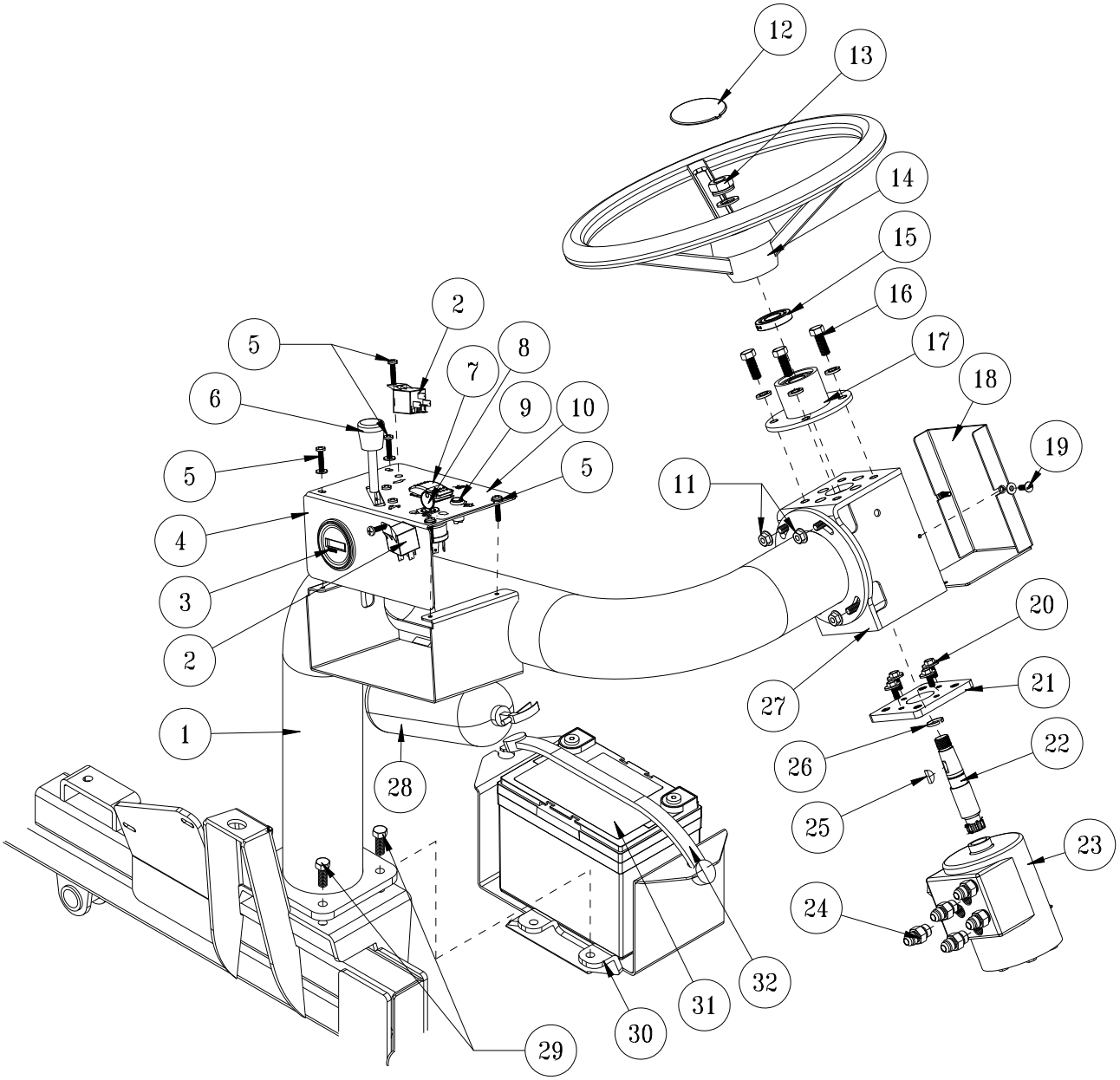

Parts

REF#	PART#	DESCRIPTION	QUANTITY
1	76-811	Side Console Arm	1
2	30-042-06	Relay	2
3	12-804	Hour Meter	1
4	76-827	Control Panel	1
5	HSM-10-32-063	Machine Screw. #10 -32 x ⅝	8
	HW-10	Flat Washer, #10	4
	HNFL-10-32	Flange Whiz-loc Nut, #10-32	4
6	76-528	Throttle Cable	1
7	10-514	Rocker Switch, 3 stage	1
	15-727	Rocker, No light	1
8	13-488	Ignition Switch	1
9	50-359	Warning Light	1
10	76-763	Decal, Control Panel	1
11	HBCL-516-18-100	Carriage Bolt, 5⁄16-18-100	4
	HNFL-516-18	Flange Whiz-loc Nut, 5⁄16-18	4
12	21-499	Center Cap	1
	27-077	Decal, Smithco	1
13	HNJ-58-18	Jam Nut, 5/8-18	1
	HMB-58-14	Machine Bushing, ⅝ x 14GA	2
14	21-498	Steering Wheel	1
15	10-711	Ball Bearing	1
16	HB-38-16-100	Hex Bolt, ⅜- 16 x 1	4
	HWL-38	Lock Washer, ⅜	4
17	10-698	Steering Column	1
18	10-704	Steering Box Cover	1
19	HSM-10-32-063	Machine Screw, #10-32x⅝	2
	HW-10	Flat Washer, #10	2
	HWL-10	Lock Washer, #10	2
20	HBM-6-1-16	Metric Bolt, M6-1x16	4
	HWLM-6	Metric Lock Washer, M6	4
21	10-689	Orb Adapter	1
22	10-825	Tapered Splined Steering Shaft	1
23	34-103	Orbitol	1
24	18-169	⅜ SAE Adapter	5
25	HWK-316-063	Woodruff Key, 3⁄16 x ⅝	1
26	HRR-075	Retaining Ring, ¾"	1
27	10-682	Steering Box	1
28	76-354	Fire Extinguisher	1
29	HB-38-16-100	Hex Bolt, ⅜-16 x 1	4
	HNFL-38-16	Flange Wiz-loc Nut, ⅜ -16	4
30	76-829	Battery Tray	1
31	22-073	Battery	1
32	8-603	Battery Strap	1

FRONT AXLE DRAWING

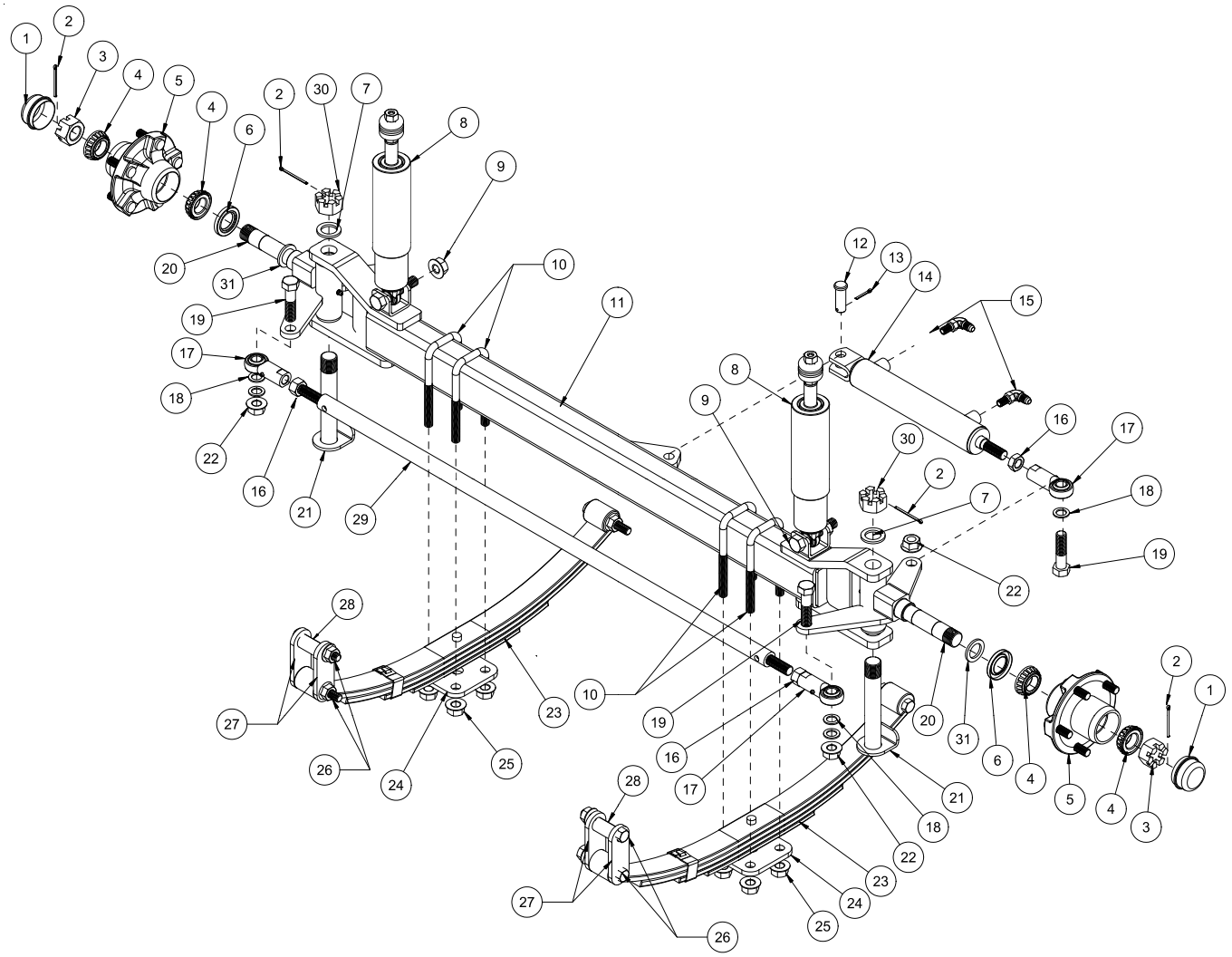

Parts

REF#	PART#	DESCRIPTION	QUANTITY
1*	33-073-02	Dust Cap	2
2	HP-18-150	Cotter Pin, $^1/_8$ - $1^1/_2$	4
3*	HNAR-100-14	Slotted Jam Nut, 1 - 14	2
4*	11-043	Bearing, Inner/Outer	2
5	30-071	Hub Assembly (includes * items)	2
6*	11-041	Seal	2
7	HMB-100-10	Machine Bushing, 1 x 10GA	2
8	20-617	Shock Absorber	2
9	HB-58-11-300	Hex Bolt, $^5/_8$ - 11 x 3	2
	HNTL-58-11	Nylon Lock Nut, $^5/_8$ -11	2
10	30-249	U-Bolt	4
11	30-533	Front Axle	1
12	HCP-58-175	Clevis Pin, $^5/_8$ x $1^3/_4$	1
13	HP-18-100	Cotter Pin, $^1/_8$ x 1	1
14	15-839	Steering Hydraulic Cylinder	1
	15-839-01	Seal Kit	1
15	18-168	$^3/_8$ Straight Thread Elbow	2
16	HNJ-58-18	Jam Nut, $^5/_8$ - 18	3
17	18-154	Rod End	3
	HG-14-28-180	Grease Fitting, $^1/_4$ - 28 x 180° (comes with 18-154)	1 per
18	HMB-58-14	Machine Bushing, $^5/_8$ x 14GA	6
19	HB-58-11-250	Hex Bolt, $^5/_8$ - 11 x $2^1/_2$	3
20	30-534	Spindle	2
	33-086	Flange Bushing (comes with 30-534)	1 per
	HG-14-28-90	Grease Fitting, $^1/_4$ -28 x 90° (comes with 30-534)	1 per
21	16-076	King Pin	2
22	HNTL-58-11	Nylon Lock Nut, $^5/_8$ -11	3
23	20-740	Leaf Spring	2
24	20-538	Spring Mount	2
25	HNFL-12-13	Flange Whiz-loc Nut, $^1/_2$ - 13	8
26	HB-916-18-325	Hex Bolt, $^9/_{16}$ - 18 x $3^1/_4$	6
	HNTL-916-18	Nylon Lock Nut, $^9/_{16}$ -18	6
27	15-930	Spring Shackle	4
28	30-251	Bushing (pressed in main frame)	2
29	30-539	Tie Rod	1
30	HNAR-100-14	Slotted Jam Nut, 1 - 14	2
31	HMB-100-14	Machine Bushing, 1 x 14GA	2

FOOT PEDAL LINKAGE DRAWING

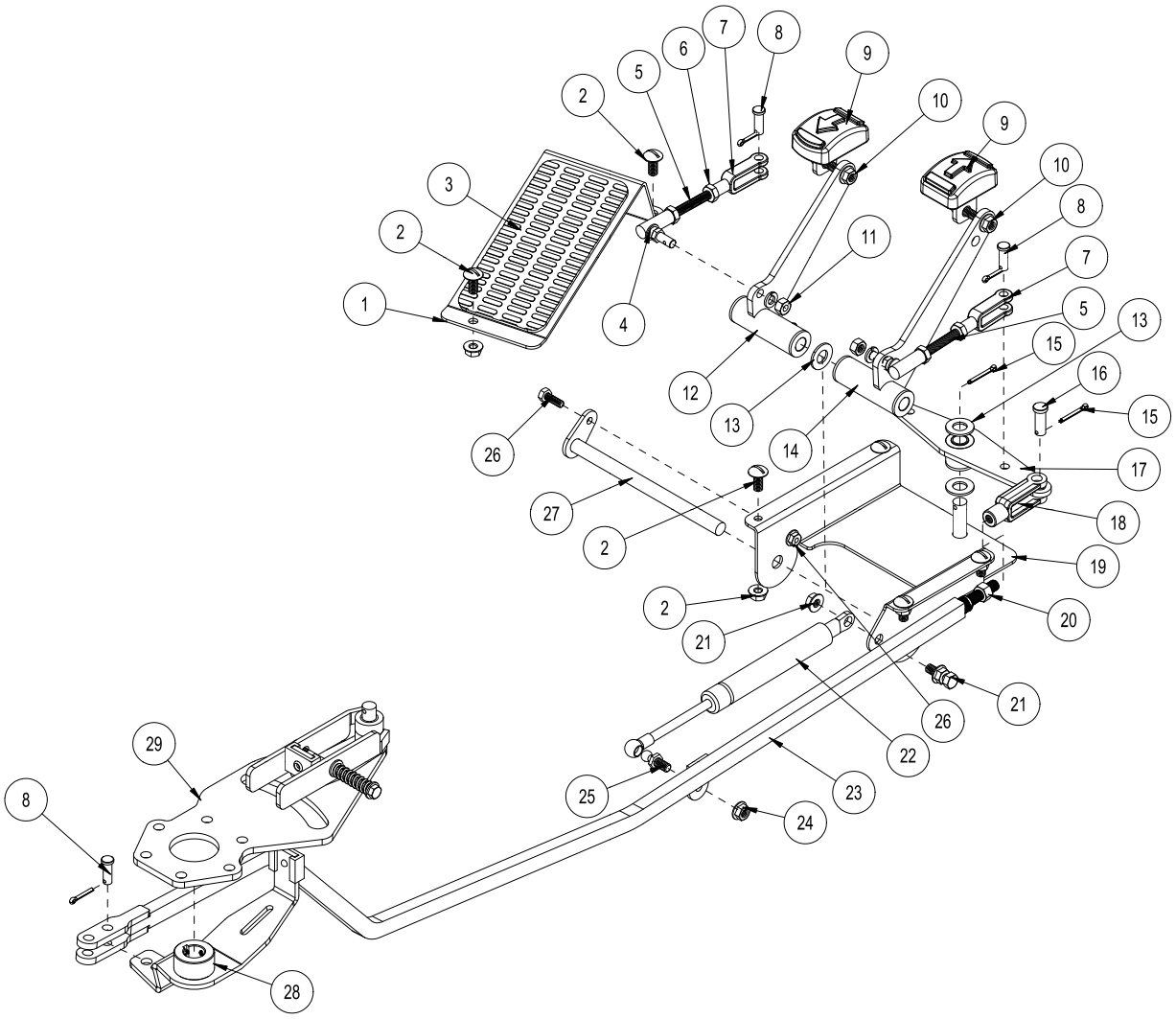

Parts

FOOT PEDAL LINKAGE PARTS LIST

REF#	PART#	DESCRIPTION	QUANTITY
1	45-047	Foot Rest	1
2	HSTP-516-18-100	Truss Head Screw, 5/16-18x 1	6
	HNFL-516-18	Flange Whiz-loc Nut, 5/16-18	6
3	45-132	Foot Rest Grip	1
4	21-462	Ball Joint, 5/16-24	2
5	10-598	Long Connector Link	2
6	HN-516-24	Hex Nut, 5/16-24	4
7	11-100	Linkage Yoke, 5/16-24	2
8	HCP-516-100	Clevis Pin, 5/16 x 1	3
	HP-18-075	Cotter Pin, 1/8 x 3/4	3
9	45-022	Molded Foot Pedal	2
10	HBFL-516-18-075	Flange Whiz-loc Bolt, 5/16-18x 3/4	2
	HNFL-516-18	Flange Whiz-loc Nut, 5/16-18	2
11	HWL-516	Lock Washer, 5/16	2
	HN-516-24	Hex Nut, 5/16 -24	2
12	10-678	Reverse Pedal	1
13	HMB-12-14	Machine Bushing, 1/2 x 14GA	3
14	10-677	Forward Pedal	1
15	HP-18-100	Cotter Pin, 1/8 x 1	2
16	HCP-38-100	Clevis Pin, 3/8 x 1	1
17	15-924	Pedal Relay	1
18	21-351	Linkage Yoke, 3/8 - 24	1
19	76-835	Pedal Mount	1
20	HN-38-24	Hex Nut, 3/8 - 24	1
21	HB-516-18-100	Hex Bolt, 5/16-18 x 1	1
	HNFL-516-18	Flange Whiz-Loc Nut, 5/16-18	2
22	20-649	Damper	1
23	76-802	Control Link	1
24	HNFL-10-32	Flange Whiz-loc Nut, #10-32	1
25	26-034	Ball Stud	1
26	HB-14-20-075	Hex Bolt, 1/4 -20 x 3/4	1
	HNFL-14-20	Flange Whiz-loc Nut, 1/4 -20	1
27	10-673	Pivot Rod	1
28	76-806	Control Arm	1
29	76-809	Centering Arm	1

SEAT DRAWING

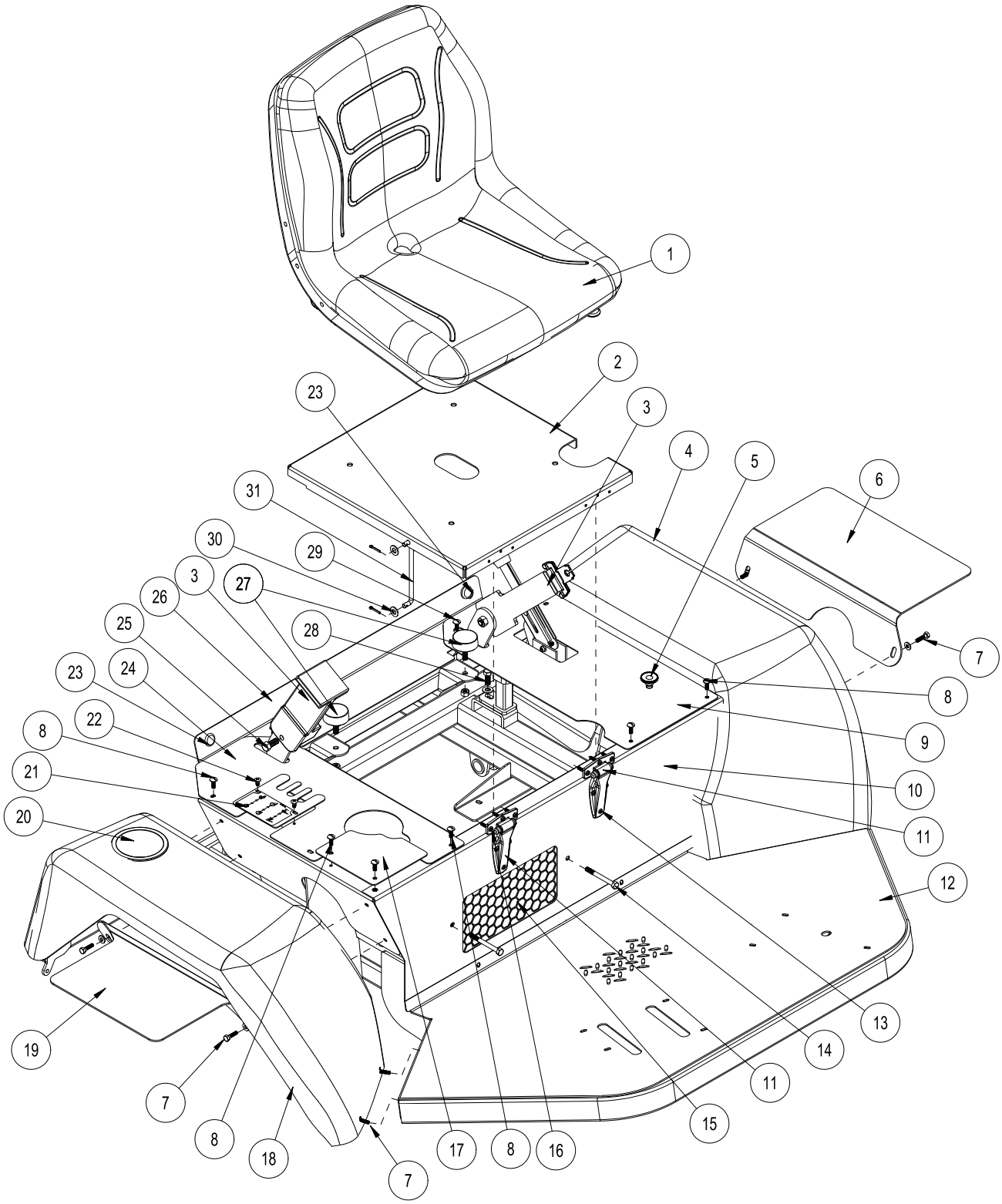

Parts

REF#	PART#	DESCRIPTION	QUANTITY
1	14-294	Seat Kit	1
	HNFL-516-18	Flange Whiz-loc Nut, 5⁄16-18	4
	14-292	Seat Switch	1
2	76-821	Seat Panel	1
3	76-198-03	Seat Belt	1
4	30-405	LH Front Fender	1
5	76-462	Choke Cable	1
6	10-823	LH Fender Support	1
7	HB-14-20-100	Hex Bolt, ¼ - 20 x 1	12
	HW-14	Washer, ¼	12
	HNFL-14-20	Flange Whiz-loc Nut, ¼-20	12
8	HSTP-14-20-075	Truss Head Screw, ¼-20 x ¾	7
9	76-818	LH Cover Plate	1
10	76-803	Seat Frame	1
11	27-055	Hinge	2
12	76-801	Main frame	1
13	HSMFCS-10-32-050	Flat Machine Screw, #10-32x½	6
	HNFL-10-32	Flange Whiz-loc Nut, #10-32	6
14	HB-516-18-150	Hex Bolt, 5⁄16 -18 x ¾	2
	HW-516	Flat Washer, 5⁄16	2
	HNTL-516-18	Lock Nut, 5⁄16-18	2
15	76-817	Oil Cooler Grill	1
16	HSMFCS-10-32-100	Flat Machine Screw, #10-32x1	6
	HNFL-10-32	Flange Whiz-loc Nut, #10-32	6
17	10-694	RH Panel Cover	1
18	30-404	RH Front Fender	1
19	10-824	RH Fender Support	1
20	15-781	Cup Holder	1
21	76-820	Valve Cover Plate	1
	76-764	Decal, Vale Controls	1
22	HSDPS-14-075	Pan Head Drill Screw, ¼ x¾	2
23	42-116	Rubber Insert	2
24	76-819	RH Cover	1
25	HB-716-14-100	Hex Bolt, 7⁄16 - 14 x 1	2
	HNTL-716-14	Lock Nut, 7⁄16-14	2
26	76-838	Rear Trim Panel	1
27	50-081	Rubber Insulator	2
	HNTL-38-16	Lock Nut, ⅜-16	2
28	HB-38-16-100	Hex Bolt, ⅜ -16 x 1	2
	HW-38	Flat Washer, ⅜	2
	HNFL-38-16	Flange Whiz-loc Nut, ⅜-16	2
29	HSTP-14-20-075	Truss Head Screw, ¼ - 20 -¾	2
	HNFL-14-20	Flange Whiz-loc Nut, ¼-20	2
30	HW-38	Flat Washer, ⅜	2
	HP-18-075	Cotter pin, ⅛ x ¾	2
31	10-697	Seat Prop Rod	1

GAS & OIL TANK DRAWING

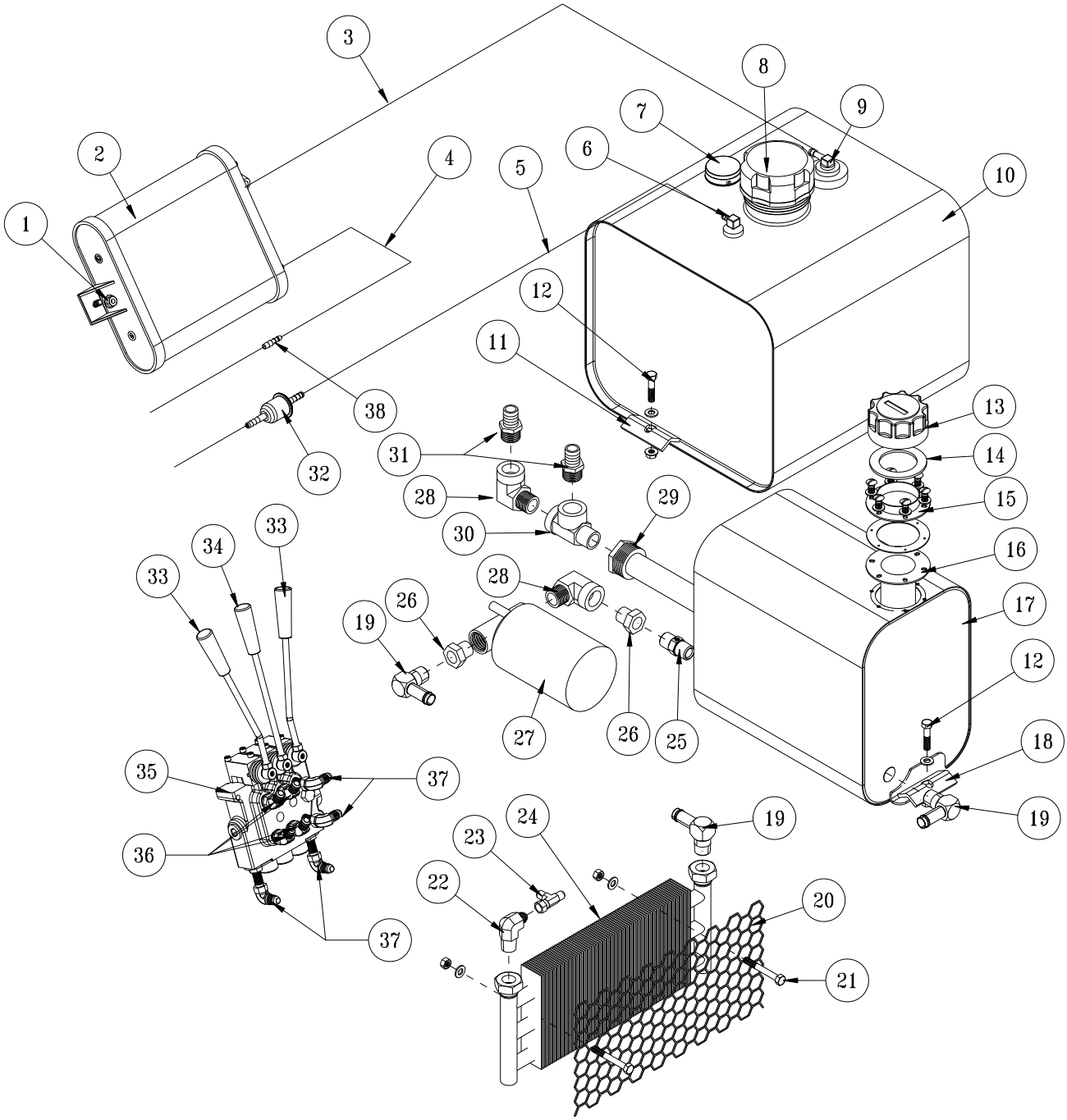

Parts

REF#	PART#	DESCRIPTION	QUANTITY
1	HB-516-18-100	Hex Bolt, 5/16 - 18 x 1	2
	HW-516	Flat Washer. 5/16	4
	HNTL-516-18	Lock Nut, 5/16-18	2
2	20-721	CARB Canister	1
3	8800	¼" Fuel Hose Line	40"
	18-186	Hose Clamp	1
4	8800	¼" Fuel Hose Line (to engine)	48"
5	8800	¼" Fuel Hose Line	53"
	18-186	Hose Clamp	1
6*	20-692-01	Top Draw w/ Grommet	1
7*	20-692-02	Fuel Gage	1
*	20-692-03	Fuel Gage Grommet	1
8	20-694	Fuel Cap	1
9	42-814-05	Rollover Valve	1
	42-814-06	Rollover Valve Grommet	1
10	20-692	10 Gallon Fuel Tank (includes * items)	1
	18-444	¼" Hex Plug (bottom)	1
11	75-792	Tank Clamp, Bent	1
12	HB-516-18-150	Hex Bolt, 5/16-18-1½	3
	HW-516	Flat Washer, 5/16	3
	HNFL-516-18	Flange Whiz-loc Nut, 5/16-18	3
13	13-768	Filler Breather (includes ** Items)	1
14**	13-586-01	Cap Gasket	1
15**	13-768-01	Tank Neck, Short	1
**	HSM-10-32-063	Machine Screw, #10-32 x ⅝	6
**	HWL-10	Lock Washer, #10	6
16**	13-586-02	Bottom Gasket	2
17	60-473	Oil Tank	1
**	18-444	¼" Hex Plug (bottom)	1
18	75-792	Tank Clamp, Bent	2
19	23-142	Elbow	3
20	76-817	Oil Cooler Grill	1
21	HB-516-18-150	Hex Bolt, 5/16-18-2½	2
	HW-516	Flat Washer, 5/16	2
	HNTL-516-18	Lock Nut, 5/16-18	2
22	17-019	Male Elbow	1
23	18-190	Tee	1
24	23-172	Oil Cooler	1
	76-458	Cooler Mount Kit	2
25	18-334	½" Nipple	1
26	18-008	¾ x ½ Reducer	2
27	23-006	Oil Filter	1
	23-031	Replacement Filter	
28	18-140	90° Elbow	2
29	60-213	Strainer	1
30	18-093	¾" Tee	1
31	18-249	Hose Barb	2
32	50-403	Replacement In-line Gas Filter	
33	78-858	Bent Handle - 25°	2
34	78-417	Straight Handle	1
35	76-673	3-Bank Valve	1
	HB-14-20-200	Hex Bolt, ¼ -20 x 2	2
	HNFL-14-20	Flange Whiz-loc Nut, ¼ - 20	2
36	18-188	45° O-ring Fitting	4
37	18-168	90° Elbow	4
38	42-816	Thermobarb	1

ROPS DRAWING

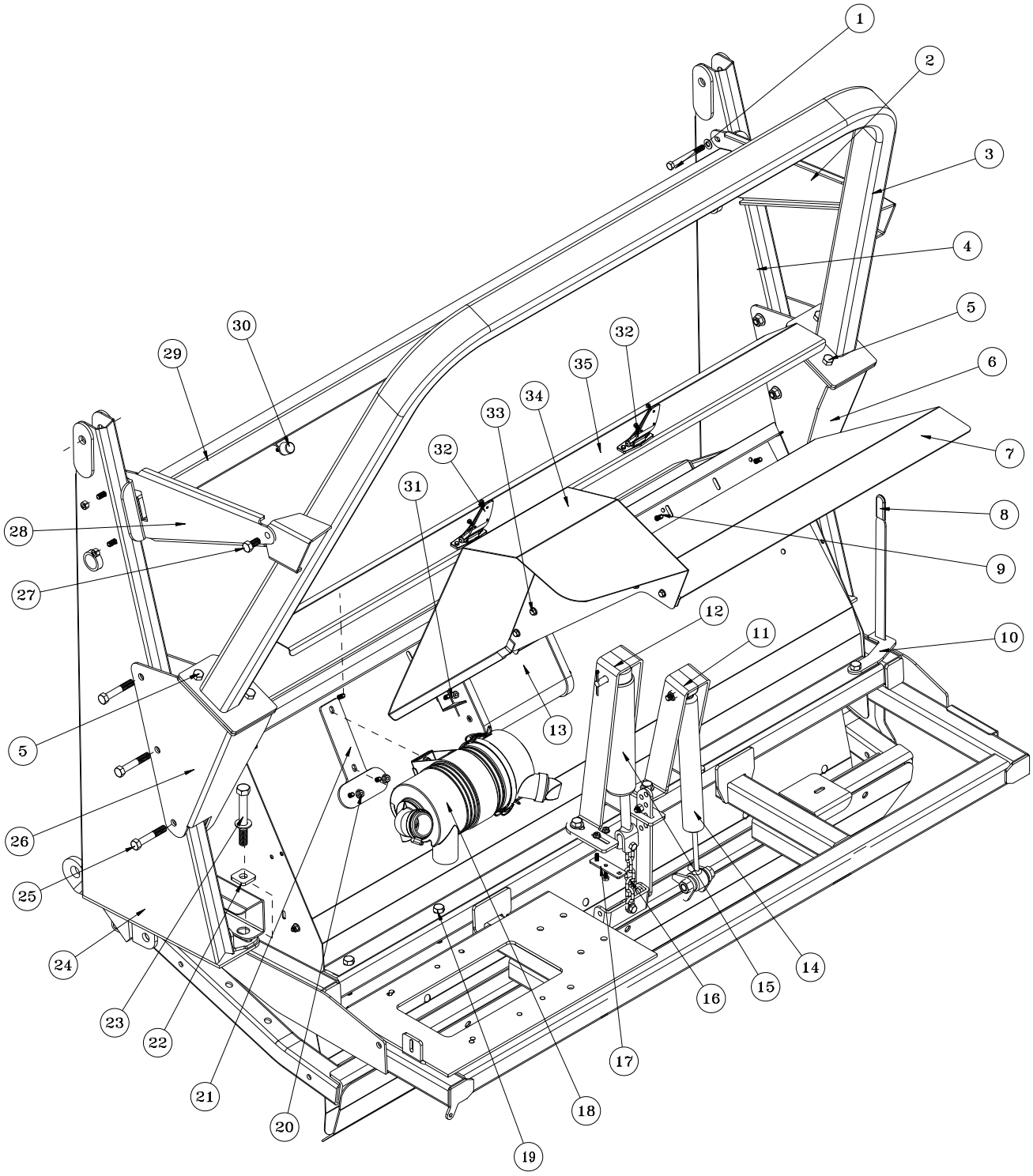

Parts

REF#	PART#	DESCRIPTION	QUANTITY
1	HB-38-16-300	Hex Bolt, ⅜- 16 x 3	4
	HW-38	Flat Washer, ⅜	4
	HNTL-38-16	Lock Nut, ⅜ - 16	4
2	76-825	Roll Bar Brace	1
3	76-810	Roll Bar	1
4	75-629	LH Tower	1
5	HB-12-13-125	Hex Bolt, ½ - 13 x 1¼	6
	HNFL-12-13	Flange Whiz-loc Nut, ½ - 13	6
6	76-807	LH Roll Bar Mount	1
7	76-840	Rear Cover	1
8	76-843	Reel Height Indicator Rod	1
	76-788	Rubber Grip	1
9	HB-516-18-075	Hex Bolt, 5⁄16 - 18 x ¾	6
	HW-516	Flat Washer, 5⁄16	6
	HNFL-516-18	Flange Whiz-loc Nut, 5⁄16 - 18	6
10	76-844	Indicator Guide	1
11	76-814	Reel Damper Mount	1
12	76-815	Reel Cylinder Mount	1
13	20-721	CARB Canister	1
14	76-674	Reel Damper - Stabilizer	1
15	76-478	Reel Lift Cylinder	1
16	8820	Machine Chain	7 links
17	76-854	Cable Mount	1
	HB-14-20-075	Hex Bolt, ¼ - 20 x ¾	2
	HNFL-14-20	Flange Whiz-loc Nut, ¼-20	2
18	76-395-04	Air Cleaner	1
19	HB-38-16-300	Hex Bolt, ⅜ - 16 x 3	7
	HW-38	Flat Washer, ⅜	7
	HNTL-38-16	Lock Nut, ⅜ - 16	7
20	HB-516-18-100	Hex Bolt, 5⁄16 - 18 x 1	2
	HW-516	Flat Washer. 5⁄16	2
	HNFL-516-18	Flange Whiz-lock Nut, 5⁄16-18	2
21	76-836	Air Cleaner Mount	1
22	76-848	Tower Washer	4
23	HB-58-11-500	Hex Bolt, ⅝ -11 x 5	4
	HW-58	Flat Washer, ⅝	4
	HNTL-58-11	Lock Nut, ⅝-11	4
24	75-561	RH Tower	1
25	HB-12-13-300	Hex Bolt, ½ - 13 x 3	6
	HNTL-12-13	Lock Nut, ½- 13	6
26	76-808	RH Roll Bar Mount	1
27	HB-12-13-100	Hex Bolt, ½ - 13 x 1	2
	HNFL-12-13	Flange Whiz-loc Nut, ½-13	2
28	76-825	Roll Bar Brace	1
29	76-852	Cross Bar	1
30	15-013	Rubber Bumper	1
	HNFL-14-20	Flange Whiz-loc Nut, ¼- 20	1
31	HB-516-18-100	Hex Bolt, 5⁄16 - 18 x 1	2
	HW-516	Flat Washer. 5⁄16	4
	HNTL-516-18	Lock Nut, 5⁄16-18	2
32	27-055	Hinge	2
	HSMFCS-10-32-050	Flat Machine Screw, #10-32x½	12
	HNFL-10-32	Flange Whiz-loc Nut, #10-32	12
33	HB-14-20-075	Hex Bolt, ¼ - 20 x 3/4	5
	HW-14	Flat Washer, ¼	5
	HNFL-14-20	Flange Whiz-loc Nut, ¼ - 20	5
34	76-839	Engine Housing	1
35	76-845	Debris Shield	1

REEL LIFT DRAWING

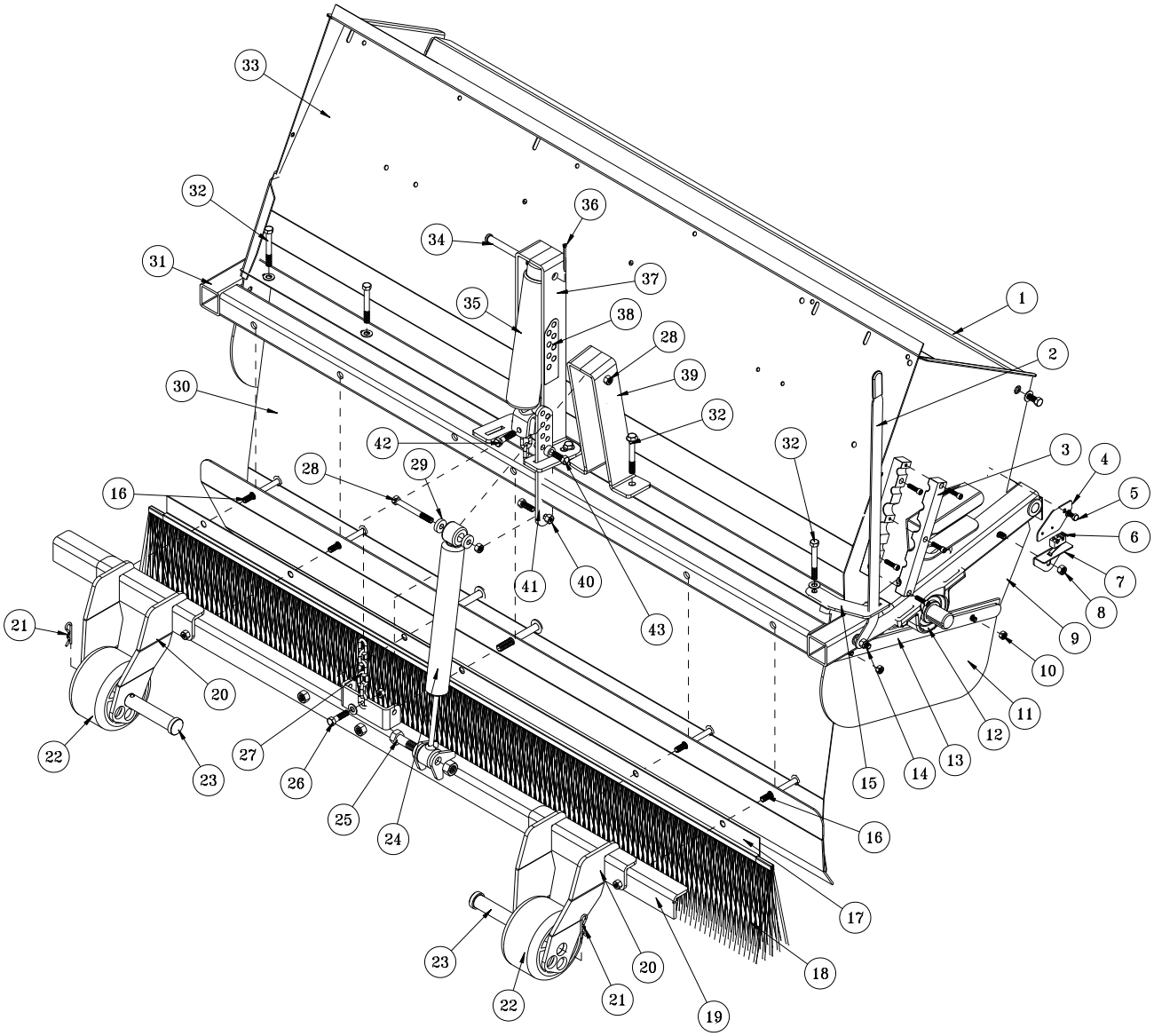

Parts

REF#	PART#	DESCRIPTION	QUANTITY
1	76-234	Baffle, Rear Chute	1
	HB-38-16-100	Hex Bolt, ⅜ - 16 x 1	2
	HW-38	Flat Washer, ⅜	2
	HNFL-38-16	Flange Whiz-loc Nut, ⅜ - 16	2
2	76-843	Reel Height Indicator	1
	76-788	Rubber Grip	1
3	76-336	Hose Clamp w/ Hardware	1
4	76-850	Limit Switch Mount	1
5	HB-14-20-075	Hex Bolt, ¼-20 x ¾	1
	HWL-14	Lock Washer, ¼	1
6	20-081	Limit Switch	1
7	76-851	Limit Switch Contactor	1
8	HB-38-16-275	Hex Bolt, ⅜-16-2¾	1
	HW-38	Flat Washer, ⅜	1
	HNTL-38-16	Lock Nut, ⅜-16	1
9	75-800	LH Side Panel	1
	75-799	RH Side Panel (not shown)	1
10	HB-516-18-100	Hex Bolt, 5⁄16 - 18 x 1	2
	HW-516	Flat Washer, 5⁄16	2
	HNTL-516-18	Lock Nut , 5⁄16-18	2
11	76-210	Matting	2
12	75-511	Pillow Block	2
13	76-213	Reel Guard Strap	2
14	HB-38-16-350	Hex Bolt, ⅜-16-3½	1
	HW-38	Flat Washer, ⅜	2
	HN-38-16	Hex Nut, ⅜-16	1
	HNTL-38-16	Lock Nut, ⅜-16	1
15	76-844	Indicator Guide	1
16	HB-38-16-350	Hex Bolt, ⅜ -16 x 3½	6
	HW-38	Flat Washer, ⅜	6
	HNTL-38-16	Lock Nut, ⅜ -16	6
17	76-438	Brush Channel	1
18	76-439	Brush Strip	1
19	76-804	Reel Lift Bar	1
20	76-812	Gage Wheel Bracket	2
21	HHP-18	Bridge Pin, ⅛"	2
22	76-768	Gage Wheel	2
23	HCP-100-450	Clevis Pin, 1 x 4½	2
24	76-674	Reel Damper -Stabilizer	1
25	HB-58-11-250	Hex Bolt, ⅝ - 11 x 2½	1
	HN-58-11	Hex Nut, ⅝- 11	1
26	HB-38-16-100	Hex Bolt, ⅜ - 16 x 1	1
	HW-38	Flat Washer, ⅜	1
	HNTL-38-16	Lock Nut, ⅜ -16	1
27	8820	Machine Chain	7 Links

REEL LIFT DRAWING

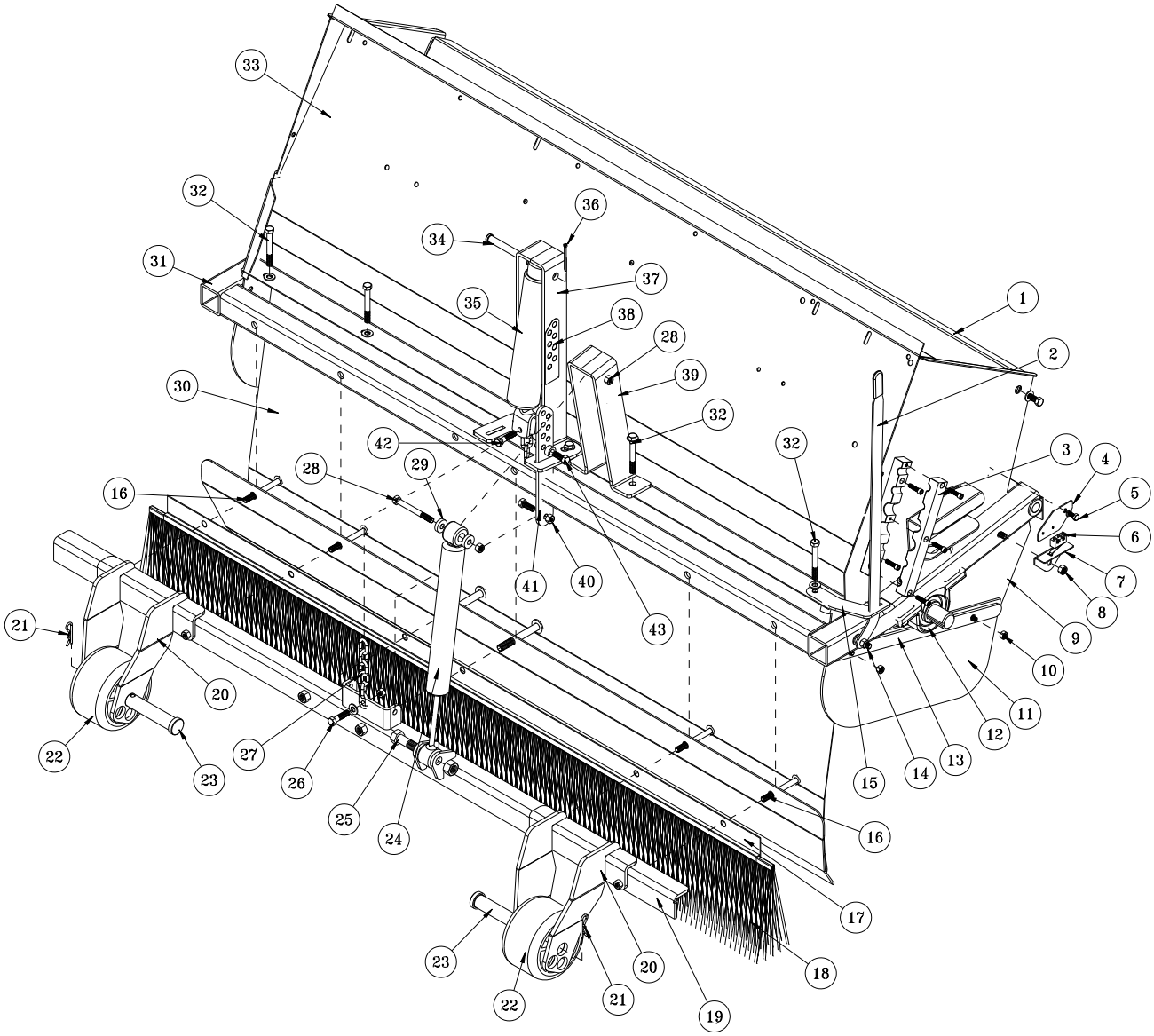

Parts

REF#	PART#	DESCRIPTION	QUANTITY
28	HB-38-16-350	Hex Bolt, ⅜ -16 x 3½	1
	HNTL-38-16	Lock Nut, ⅜ -16	1
29	76-824	Limit Disc	2
30	75-808	Front Baffle	1
31	75-787	Reel Frame	1
32	HB-38-16-300	Hex Bolt, ⅜ - 16 x 3	7
	HW-38	Flat Washer, ⅜	7
	HNTL-38-16	Lock Nut, ⅜ - 16	7
33	76-235	Grass Chute	1
34	HCP-12-350	Clevis Pin, ½ x 3½	1
35	76-478	Reel Lift Cylinder	1
36	HP-316-200	Cotter Pin, 3⁄16 x 2	1
37	76-815	Ram Mount	1
38	76-853	Decal, Reel Limit	1
39	76-814	Damper Mount	1
40	HB-38-16-100	Hex Bolt, ⅜ - 16 x 1	1
	HNTL-38-16	Lock Nut, ⅜- 16	1
41	76-823	Reel Limit Strip	1
42	HB-38-16-150	Hex Bolt, ⅜ -16 x 1½	1
	HNTL-38-16	Lock Nut, ⅜ - 16	1
43	76-842	Damper Spacer	1
	HB-38-16-100	Hex Bolt, ⅜ -16 x 1	1
	HN-38-16	Hex Nut, ⅜-16	1

FINGER AND BRUSH REEL DRAWING

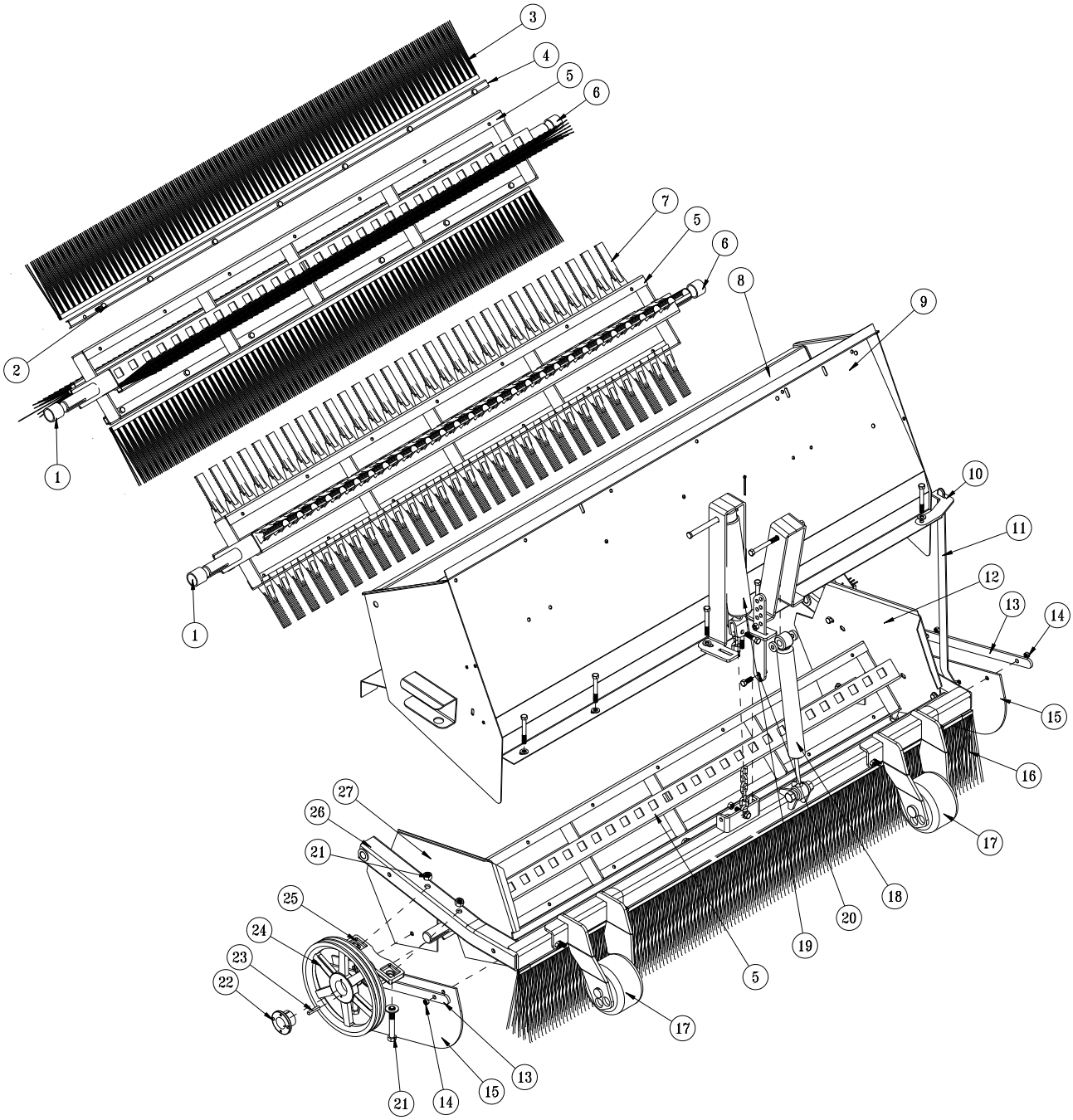

Parts

FINGER AND BRUSH REEL PARTS LIST

REF#	PART#	DESCRIPTION	QUANTITY
1	75-686	RH Spacer	1
2	HB-516-18-125	Hex Bolt, 5/16 - 18 x 1¼	28
	HNTL-516-18	Lock Nut, 5/16-18	28
3	76-330	Brush	4
4	76-313	Brush Clamp	4
5	75-780	Reel	1
6	75-834	LH Spacer	1
7	75-506	Sweeper Finger	116
8	76-234	Baffle, Rear Chute	1
9	76-235	Grass Chute	1
10	76-844	Indicator Guide	1
11	76-843	Reel Height Indicator	1
	76-788	Rubber Grip	1
12	75-800	LH Side Panel	1
	HB-38-16-275	Hex Bolt, 3/8-16-2¾	2
	HW-38	Flat Washer, 3/8	2
	HNTL-38-16	Lock Nut, 3/8-16	2
13	76-213	Reel Guard Strap	2
14	HB-516-18-100	Hex Bolt, 5/16 - 18 x 1	4
	HW-38	Flat Washer, 3/8	4
	HNTL-516-18	Lock Nut , 5/16-18	4
15	76-210	Matting	2
16	76-439	Brush Strip	1
	76-438	Brush Channel	1
17	76-768	Gage Wheel	2
18	76-674	Reel Damper -Stabilizer	1
19	76-478	Reel Lift Cylinder	1
20	76-823	Reel Limit Strap	1
21	HB-12-13-350	Hex Bolt, ½ - 13 x 3½	4
	HMB-12-14	Machine Bushing, ½ x 14GA	4
	HNTL-12-13	Lock Nut, ½ - 13	4
22	76-102-01	Hub (comes with pulley)	1
23	HKSQ-14-150	Square Key, ¼ x 1½	1
24	76-102	Pulley w/ hub	1
25	75-511	Pillow Block	2
26	75-787	Reel Frame	1
27	75-799	RH Side Plate	1
	HB-38-16-275	Hex Bolt, 3/8-16-2¾	2
	HW-38	Flat Washer, 3/8	2
	HNTL-38-16	Lock Nut, 3/8-16	2

ENGINE AND EXHAUST DRAWING

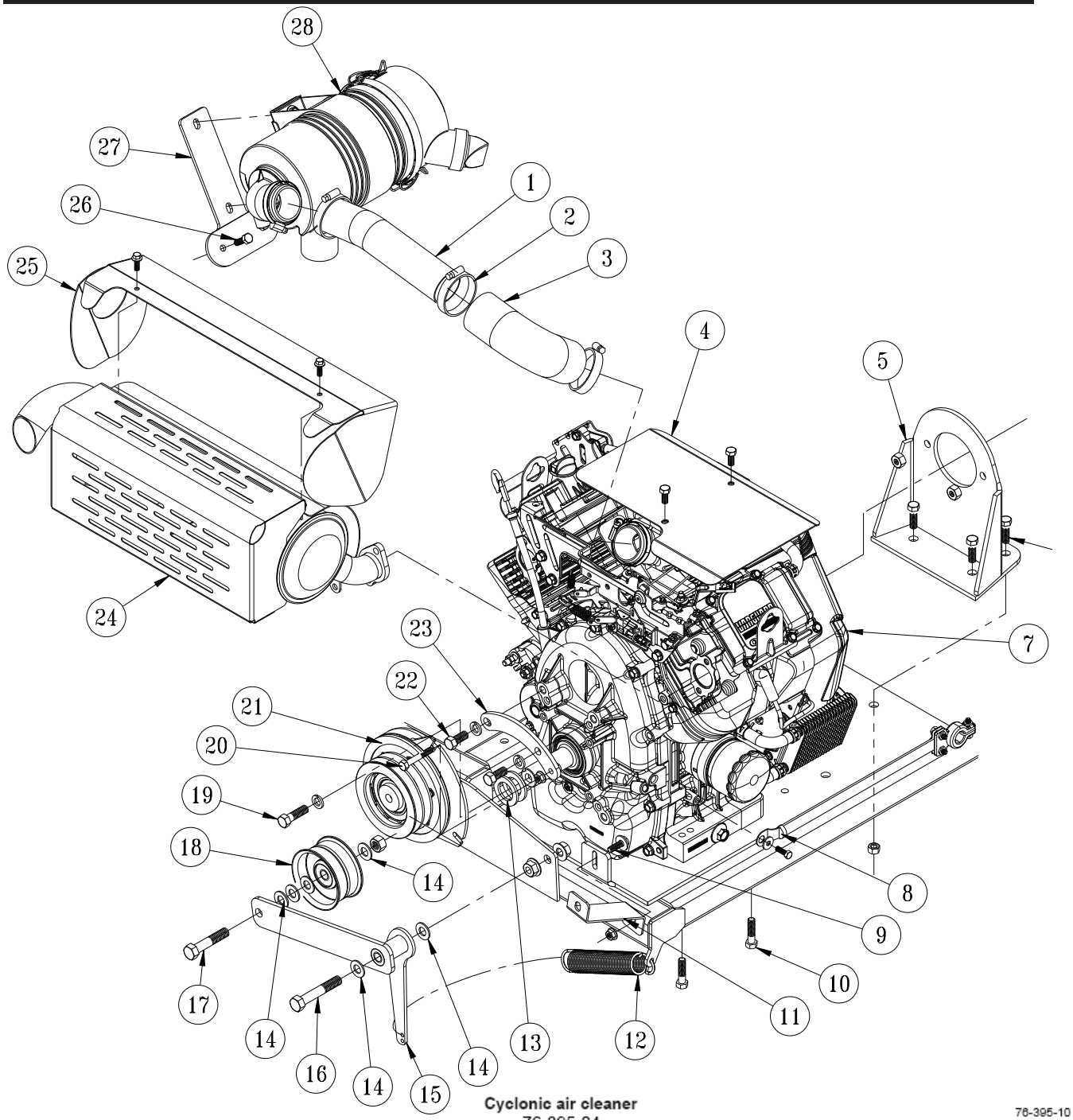

Cyclonic air cleaner
76-395-04

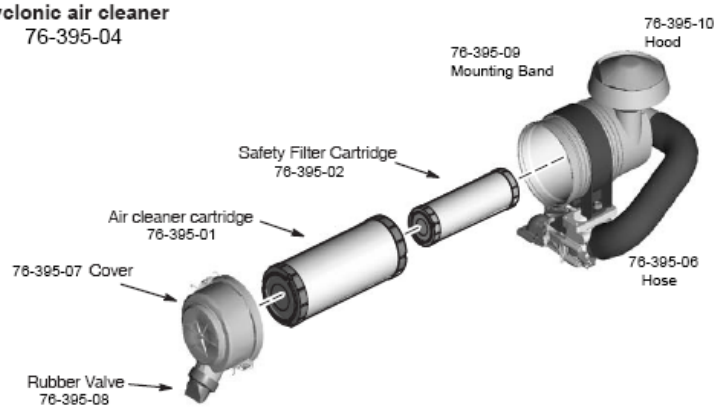

REF#	PART#	DESCRIPTION	QUANTITY
1	76-849	Air Inlet Tube	1
2	18-123	Hose Clamp	4
3	20-080	Elbow, 90° (cut to size)	1
4	76-837	Engine Cover	1
	HBM-8-1.25-25	Metric Hex Bolt, M8-1.25 x 25	2
	HWLM-8	Metric Lock Washer, M8	2
5	76-832	Pump Mount	1
6	HB-12-13-125	Hex Bolt,½-13 x1¼	4
	HNTL-12-13	Nylon Lock Nut, ½-13	4
7	76-749	Engine, Briggs & Stratton, 35 HP	1
	76-446-02	Oil Pressure Switch	1
	76-446-03	Screen	1
	76-487	Engine Oil Filter	1
	50-403	Inline Fuel Filter	1
8	76-327	Battery Cable Black	1
	HBM-6-1-20	Metric Bolt, M6-1 x20	1
	HWLM-6	Metric Lock Washer, M6	1
9	HB-516-18-100	Hex Bolt, 5/16 - 18 x 1	1
	HW-516	Flat Washer, 5/16	1
	HNFL-516-18	Flange Lock Nut, 5/16 - 18	1
10	HTTRB-38-16-150	Trilobular Rolling Bolt, 3/8 - 16 x 1 1/2	4
11	76-831	Belt Guard Brace	1
12	21-445	Extension Spring	1
13	HMB-118-10	Machine Bushing, 1 1/8 x 10 GA	2
14	HMB-12-14	Machine Bushing, 1/2 x 14 GA	8
15	76-805	Belt Tensioner	1
16	HB-12-13-300	Hex Bolt, 1/2 -13 x 3	1
	HNFL-12-13	Flange Lock Nut, 1/2 -13	2
17	HB-12-13-200	Hex Bolt, 1/2 -13 x 2	1
	HNFL-12-13	Flange Whiz-loc Nut, 1/2 -13	2
18	16-013	Idler Pulley	1
19	HB-716-14-125	Hex Bolt, 7/16 - 14 x 1 1/4	1
	HWL-716	Lock Washer, 7/16	1
20	HB-516-18-200	Hex Bolt, 5/16 - 18 x 2	1
	HNFL-516-18	Flange Lock Nut, 5/16 - 18	2
21	76-857	Electric Clutch	1
22	HB-716-14-100	Hex Bolt, 7/16 - 14 x 1	2
	HWL-716	Lock Washer, 7/16	2
23	76-856	Torque Strap	1
24	76-785	Muffler	1
25	76-841	Exhaust Guard	1
26	HB-516-18-100	Hex Bolt, 5/16-18 x 1	2
	HW-516	Flat Washer, 5/16	2
	HNFL-516-18	Flange whiz-loc Nut, 5/16 - 18	2
27	76-836	Air Cleaner Mount	1
28	76-395-04	Air Cleaner	1
	76-395-01	Air Cleaner Cartridge	1
	76-395-02	Safety Filter Cartridge	1
NS	48-157	Red Battery Cable	1

PUMP DRAWING

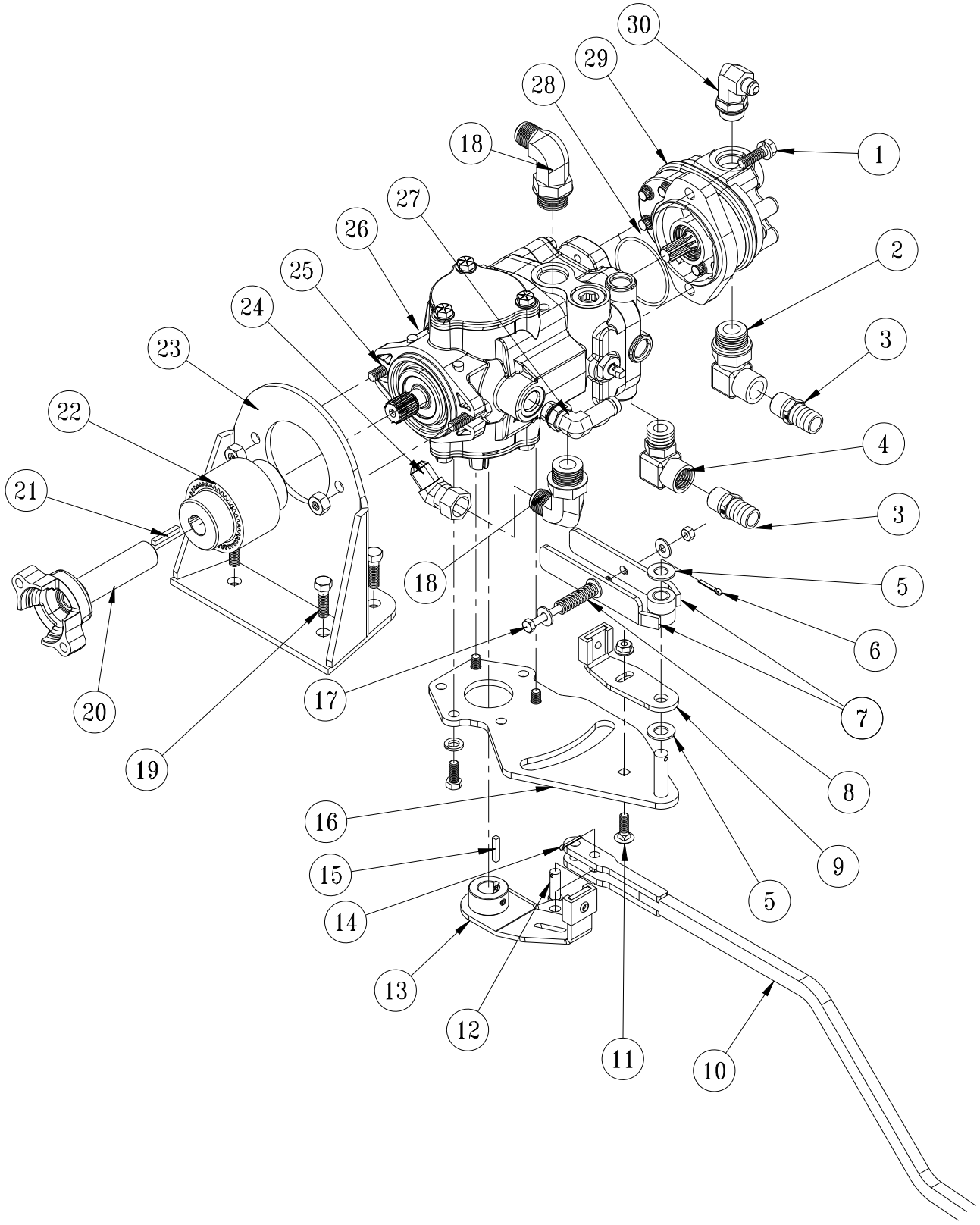

Parts

REF#	PART#	DESCRIPTION	QUANTITY
1	HB-38-16-125	Hex Bolt, ⅜- 16 x 1¼	2
	HWL-38	Lock Washer, ⅜	2
2	23-133	90° Adjustable Elbow	1
3	18-133	½ x ¾ Hose Barb	2
4	23-130	Elbow	1
5	HMB-12-14	Machine Bushing, ½ x 14GA	2
6	HP-18-075	Cotter Pin, ⅛ x ¾	1
7	76-846	Centering Arm	2
8	10-477	Compression Spring	1
9	45-327	Creep Arm	1
10	76-802	Control Link	1
11	HBCL-516-18-100	Carriage Bolt, 5⁄16-18x1	1
	HNFL-516-18	Flange Whiz-loc Nut, 5⁄16 -18	1
12	HCP-38-100	Clevis Pin, ⅜ x 1	1
13	76-806	Control Arm	1
14	HP-332-075	Cotter Pin, 3⁄32 x ¾	1
15	HKSQ-316-100	Replacement Key	1
16	76-809	Centering Mount	1
17	HB-14-20-400	Hex Bolt, ¼ -20 x 4	1
	HW-14	Flat Washer, ¼	3
	HNTL-14-20	Lock Nut, ¼-20	1
18	18-204	Elbow	2
19	HB-12-13-125	Hex Bolt,½-13 x1¼	4
	HNTL-12-13	Nylon Lock Nut, ½-13	4
20	76-446-01	Shaft (on engine)	1
	76-446-03	Screen (on engine)	1
21	HKSQ-14-125	Square Key, ¼ x 1¼	1
22	76-465	Coupling, Complete	1
	76-466	⅞ Coupling Half	1
	76-467	1⅛ Coupling Half	1
	76-468	Sleeve M42	1
23	76-832	Pump Mount	1
24	18-273	45° Fitting	1
25	HB-716-14-150	Hex Bolt, 7⁄16 -14 x 1½	2
	HW-716	Flat Washer,7⁄16	2
	HWL-716	Lock Washer, 7⁄16	2
	HN-716-14	Hex Nut, 7⁄16 - 14	2
26	48-267	Hydro Pump	1
27	18-364	90° Hose Barb	1
28	23-145	O-ring	1
29	48-266	Gear Pump	1
30	18-458	90° O-ring Fitting	1

REEL BELT DRIVE DRAWING

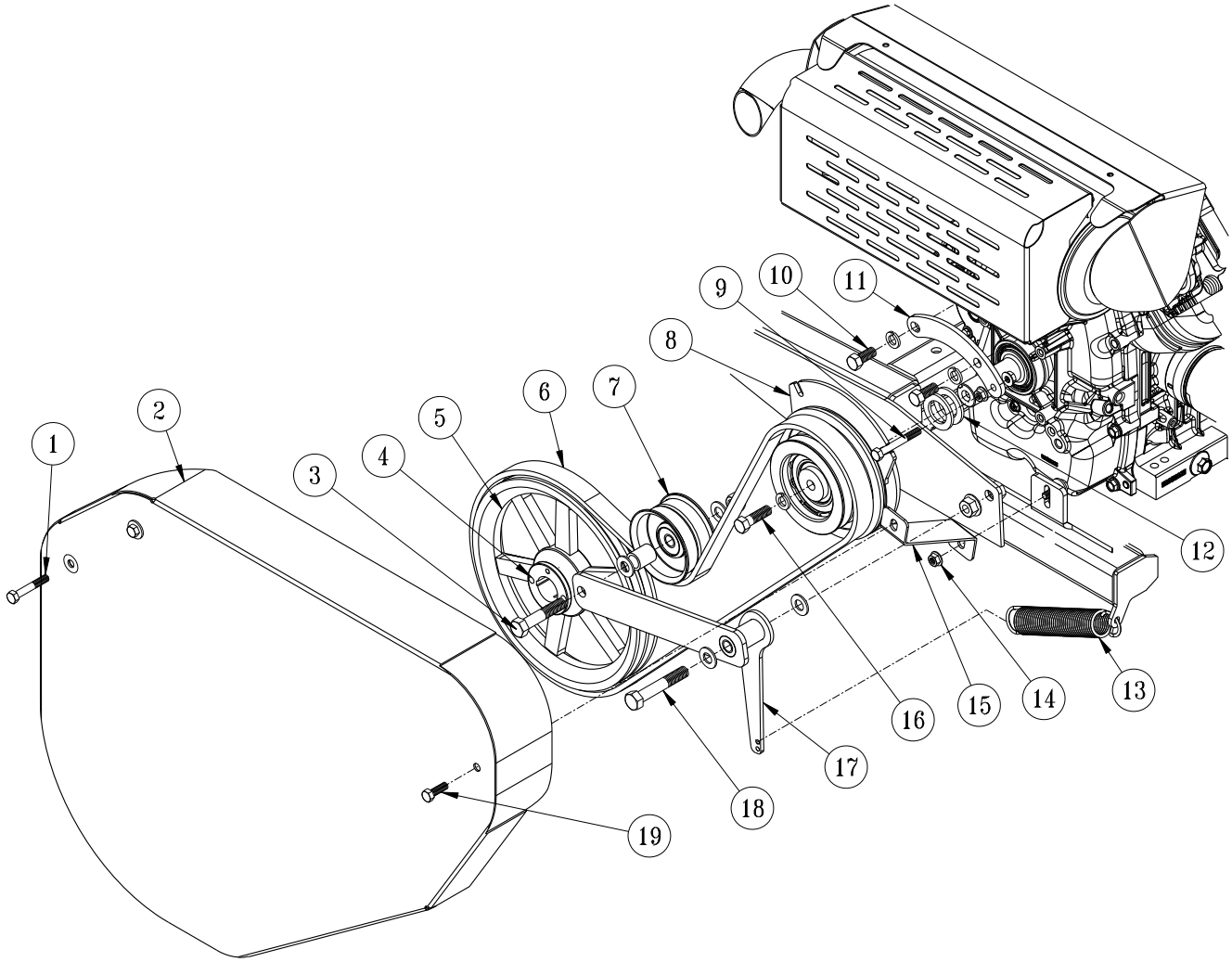

REEL BELT DRIVE PARTS LIST

REF#	PART#	DESCRIPTION	QUANTITY
1	HB-38-16-200	Hex Bolt, ⅜-16x 2	2
	HW-38	Flat Washer, ⅜	2
	HWL-38	Lock Washer, ⅜	2
2	76-813	Belt Cover	1
3	HB-12-13-250	Hex Bolt, ½ -13 x 2½	1
	HMB-12-14	Machine Bushing, ½ x 14 GA	2
	HNTL-12-13	Nylon Lock Nut, ½ -13	1
4	76-102-01	Hub	1
5	76-102	Reel Pulley	1
6	76-767	Belt	1
7	16-013	Idler Pulley	1
	34-215	Spacer	1
8	76-857	Electric Clutch	1
9	HB-516-18-200	Hex Bolt, 5/16 - 18 x 2	1
	HNFL-516-18	Flange Lock Nut, 5/16 - 18	2
10	HB-716-14-100	Hex Bolt, 7/16 - 14 x 1	2
	HWL-716	Lock Washer, 7/16	2
11	76-856	Torque Strap	1
12	HMB-118-10	Machine Bushing, 1⅛ x 10 GA	2
13	21-445	Extension Spring	1
14	HB-516-18-100	Hex Bolt, 5/16 - 18 x 1	1
	HW-516	Flat Washer, 5/16	1
	HNFL-516-18	Flange Lock Nut, 5/16 - 18	1
15	76-831	Belt Guard Brace	1
16	HB-716-14-125	Hex Bolt, 7/16 - 14 x 1¼	1
	HWL-716	Lock Washer, 7/16	1
17	76-805	Belt Tensioner	1
18	HB-12-13-300	Hex Bolt, ½ -13 x 3	1
	HMB-12-14	Machine Bushing, ½ x 14 GA	2
	HNFL-12-13	Flange Lock Nut, ½ -13	2
19	HB-516-18-100	Hex Bolt, 5/16 - 18 x 1	1
	HNFL-516-18	Flange Lock Nut, 5/16 - 18	1

REAR AXLE DRAWING

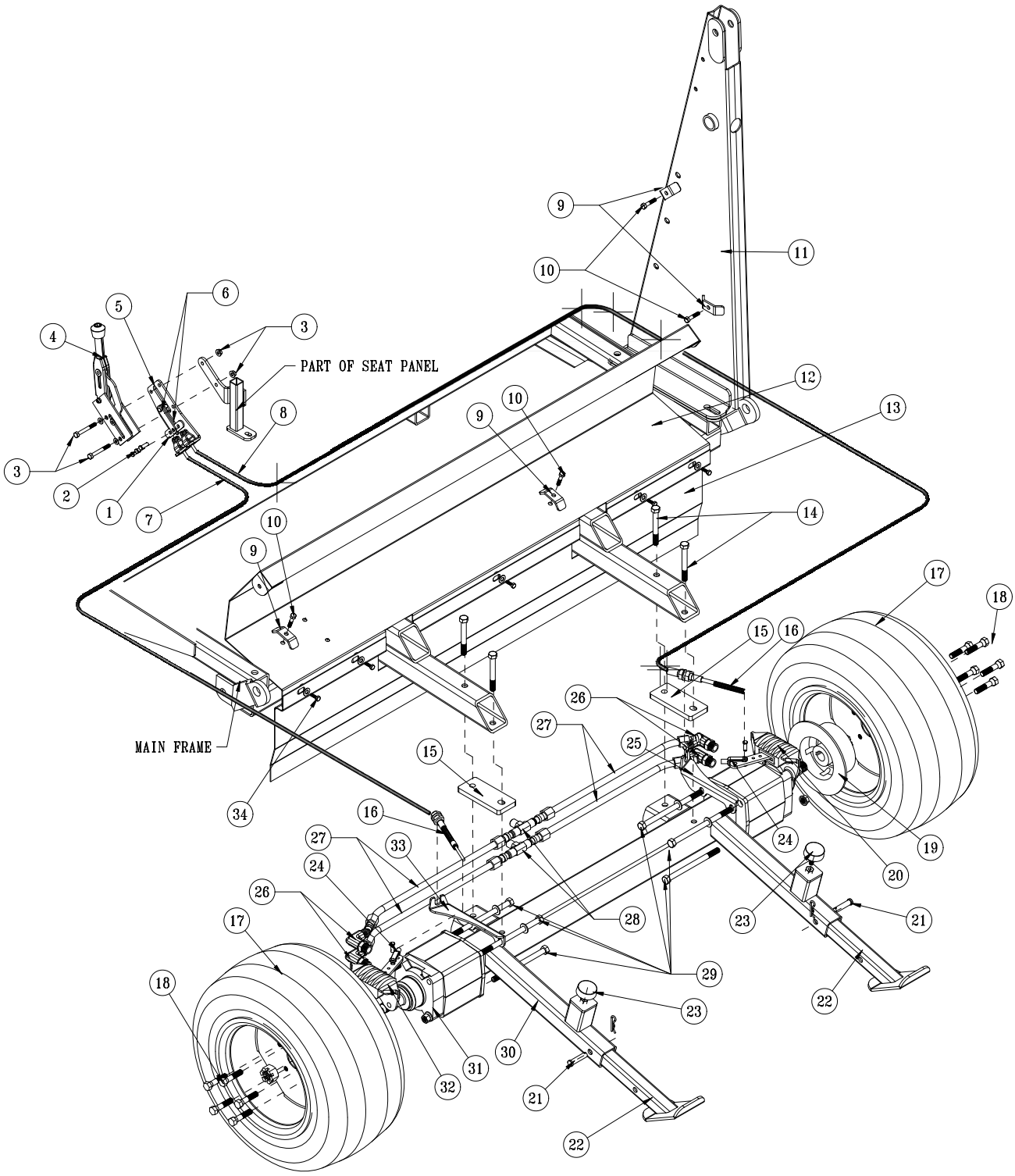

Torque to 160 ft/lbs(208Nm)

REF#	PART#	DESCRIPTION	QUANTITY
1	10-591	Brake Equalizer	1
2	HCP-516-100	Clevis Pin, 5/16 X 1	3
	HP-18-075	Cotter Pin, 1/8 X 3/4	3
3	HB-516-18-200	Hex Bolt, 5/16-18 X 2	2
	HW-14	Washer, 1/4	2
	HNFL-516-18	Flange Whiz-loc Nut, 5/16-18	2
4	60-106	Park Brake Lever Kit	1
5	76-828	Park Brake Bracket	1
6	76-830	Park Brake Link	2
7	76-765	LH Brake Cable	1
8	76-766	RH Brake Cable	1
9	13-099	Cable Bracket	4
10	HB-516-18-125	Hex Bolt, 5/16 -18 x 1 1/4	4
	HW-516	Flat Washer, 5/16	4
	HNTL-516-18	Nylon Lock Nut, 5/16 - 18	4
11	75-561	RH Tower	1
12	76-234	Rear Chute Baffle	1
13	76-233	Rear Beater Panel	1
14	HB-12-13-400	Hex Bolt, 1/2 - 13 x 4	4
	HNTL-12-13	Lock Nut, 1/2-13	4
15	76-639	Axle Spacer	2
16	15-949	Compression Spring	2
17	16-225	Tire and Wheel	2
	16-225-01P	Tire	2
	16-225-02P	Wheel	2
18	60-268	Lug Bolt,1/2-20	10
19	76-239	Brake Disk	2
20*	76-241	RH Brake Caliper	1
21	HCP-12-225	Clevis Pin, 1/2 x 2 1/4	2
	HHP-18	Bridge Pin, 1/8	2
22	75-723	Rear Skid	2
23	50-081	Rubber Insulator	2
	HN-38-16	Hex Nut, 3/8 - 16	2
24	11-100	Linkage Yoke	2
	HN-516-24	Hex Nut, 5/16 - 24	2
	HCP-516-100	Clevis Pin, 5/16 x 1	2
	HP-18-075	Cotter Pin, 1/8 x 3/4	2
25	10-589	RH Brake Cable Bracket	1
26	34-122	Short Elbow	4
27	20-656	Hydraulic Tube Assembly	4
28	34-057	Tee	2
29	HB-12-13-750	Hex Bolt, 1/2 -13 x 7 1/2	8
	HMB-12-14	Machine Bushing, 1/2 x 14GA	4
	HNFL-12-13	Flange Whiz-loc Nut, 1/2 - 13	8
30	76-616	Rear Axle	1
31	76-238	Wheel Motor	2
	HWK-516-100	Woodruff Key, 5/16 x 1	2
32*	76-240	LH Brake Caliper	1
33	10-588	LH Brake Cable Bracket	1
34	HB-38-16-100	Hex Bolt, 3/8 - 16 x 1	5
	HW-38	Flat Washer, 3/8	5
	HWL-38	Lock Washer, 3/8	5
*	34-101-02	Brake Pad Kit (2 pads and steel backing plates)	2 kits per axle
*	34-101-01	Brake Pads Only	

HOPPER LIFT CYLINDER DRAWING

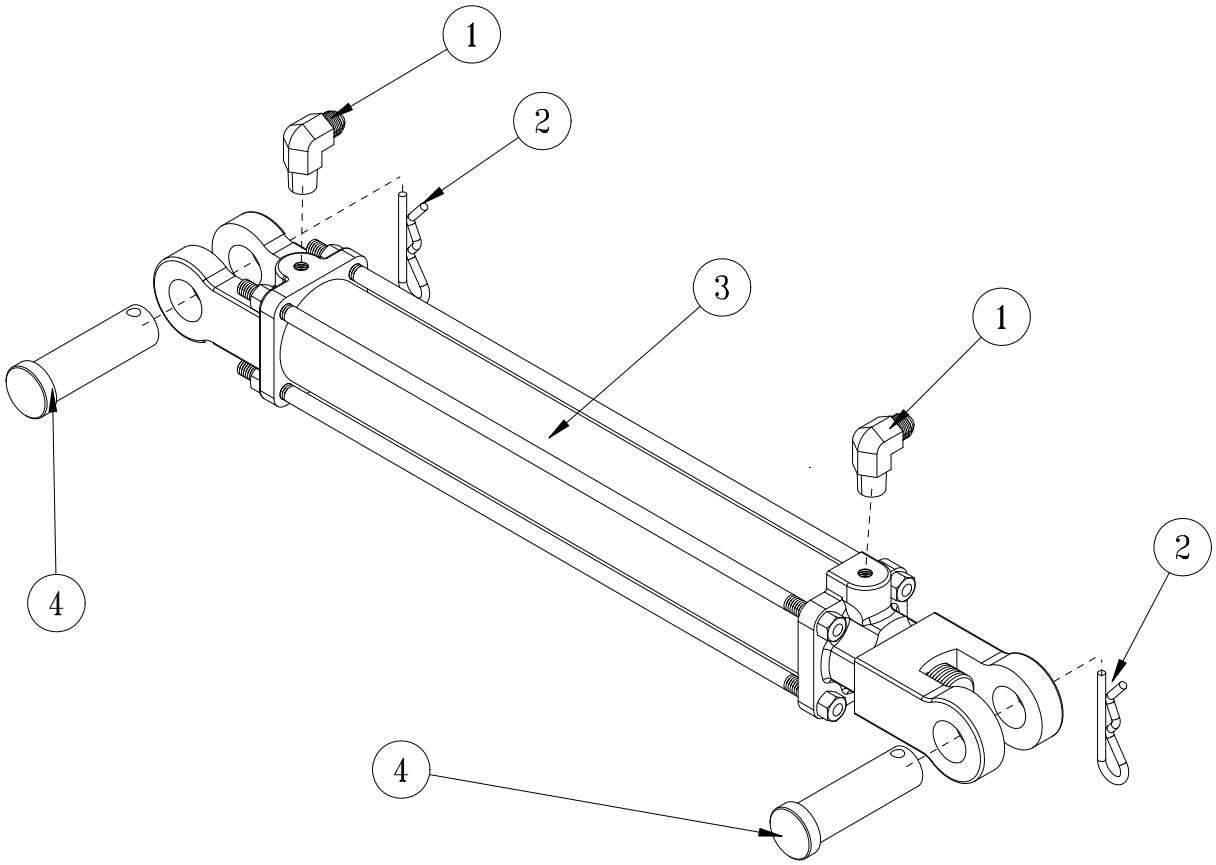

REF#	PART#	DESCRIPTION	QUANTITY
1	23-167	Elbow	2
2	HHP-.177	Bridge Pin, .177 x $3^3/_4$	2
3	76-627	Hydraulic Cylinder	1
	76-242-01	Seal Kit	1
4	HCP-100-325	Clevis Pin, 1 x $3^1/_4$	2

2 Cylinder Assemblies per Machine

Torque Specification
Piston Nut..... 165 ft/lbs (214.5 Nm)
Tie Rod Nut..... 30 ft/lbs (39 Nm)
Clevis Nut..... 46 ft/lbs (59.8 Nm)

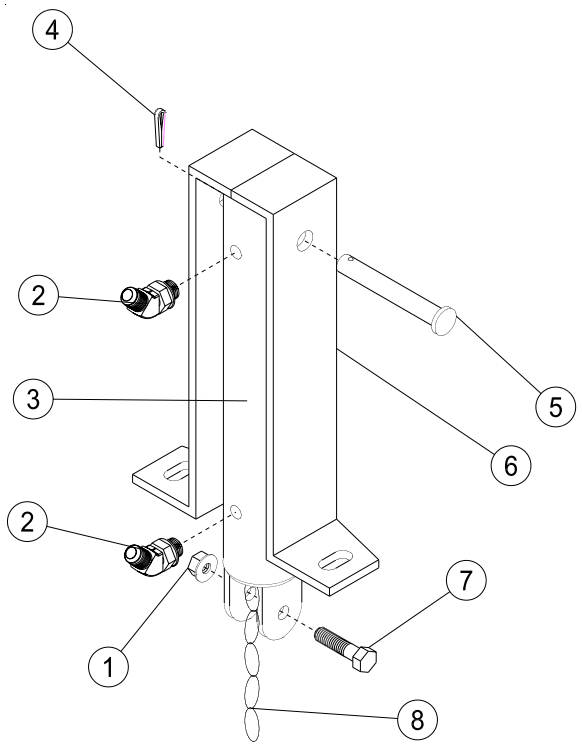

REF#	PART#	DESCRIPTION	QUANTITY
1	HNTL-38-16	Nylon Lock Nut, $^3/_8$ - 16	1
2	18-188	Elbow, $^3/_8$ SAE	2
3	76-478	Hydraulic Cylinder, 2 x 7 x $^3/_4$	1
	14-531	Seal Kit	
4	HP-316-200	Cotter Pin, $^3/_{16}$ x 2	1
5	HCP-12-350	Clevis Pin, $^1/_2$ - $3^1/_2$	1
6	75-815	Cylinder Bracket	1
7	HB-38-16-150	Hex Bolt, $^3/_8$ - 16 x $1^1/_2$	1
8	8820	Machine Chain St. Link	7 Links

HOPPER DRAWING

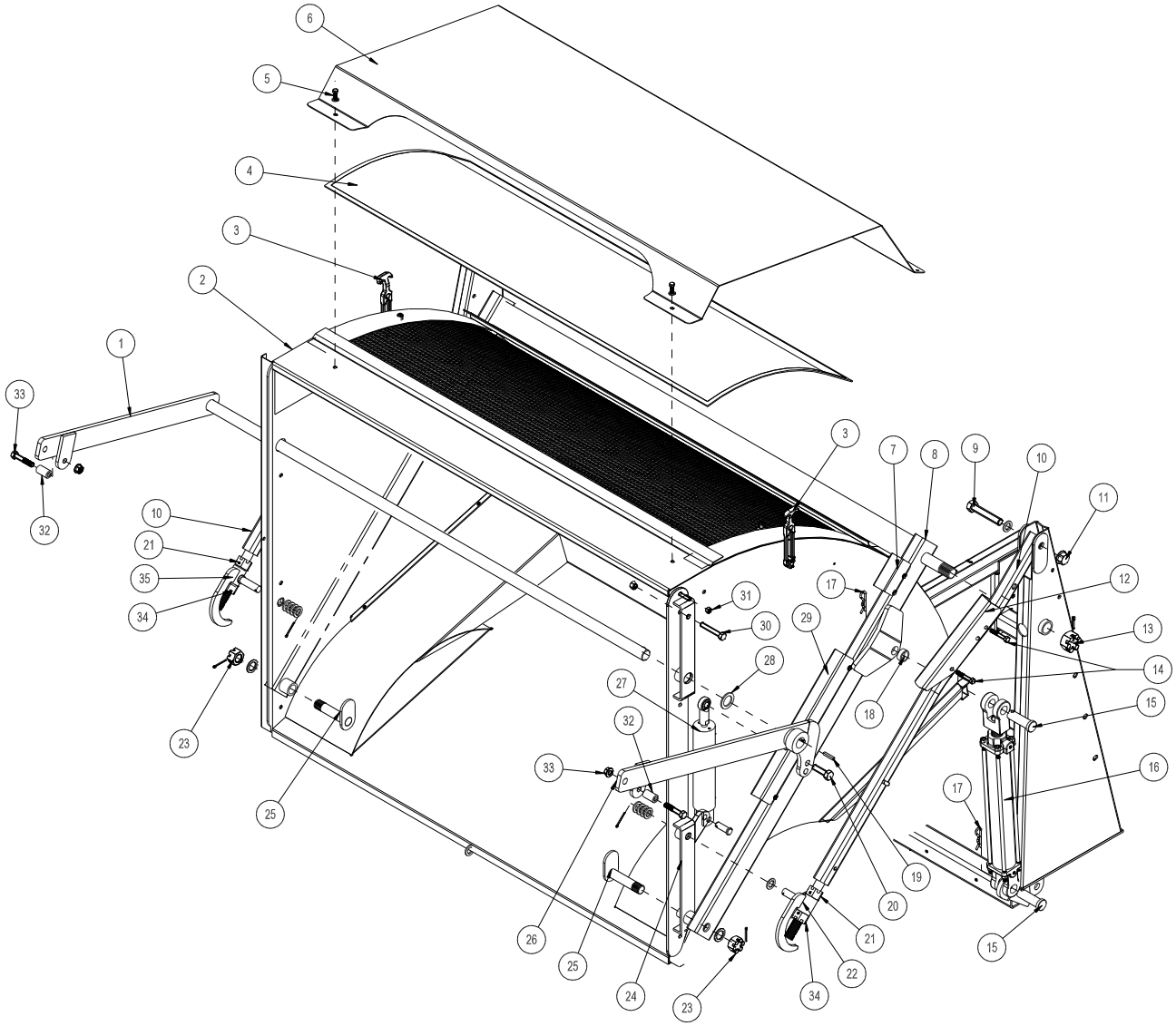

Parts

REF#	PART#	DESCRIPTION	QUANTITY
1	76-414	Left Tailgate Dump Bar	1
2	76-237	Hopper	1
3	15-437	Latch	2
	HRS-316-1125	Rivet, $^3/_{16}$ x $1^1/_8$	6
	HRW-316	Rivet Washer, $^3/_{16}$	6
	HW-316	Washer, $^3/_{16}$	4
4	76-261	Hopper Screen	1
5	HB-516-18-075	Hex Bolt, $^5/_{16}$ -18 x $^3/_4$	6
	HW-516	Flat Washer, $^5/_{16}$	6
	HNTL-516-18	Nylon Lock Nut, $^5/_{16}$ - 18	6
6	76-359	Hopper Screen Cover	1
7	76-161	Short Metal Hose Guard	1
8	76-211	Arm Pivot Tube	1
9	HB-34-10-400	Hex Bolt, $^3/_4$ - 10 x 4	2
	HMB-34-10	Machine Bushing, $^3/_4$ - 10GA	2
10	76-230	Hopper Dump Arm	2
11	HNTL-34-10	Nylon Lock Nut, $^3/_4$ - 10	2
12	75-653	Hopper Safety Lift	2
13	HNA-114-12	Axle Nut, $1^1/_4$ - 12	2
	HP-316-200	Cotter Pin, $^3/_{16}$ x 2	2
14	HB-38-16-225	Hex Bolt, $^3/_8$ - 16 x $2^1/_4$	4
	HNW-38-16	Wing Nut, $^3/_8$ - 16	4
15	HCP-100-325	Clevis Pin, 1 x $3^1/_4$	4
16	76-627	Hydraulic Cylinder	2
17	HHP-.177	Bridge Pin, .177 x $3^3/_4$	4
18*	76-288	Spacer	2
19	HKSQ-14-150	Machine Key, $^1/_4$ x $^1/_4$ x $1^1/_2$	1
	HSSHS-516-18-038	Set Screw, $^5/_{16}$ - 18 x $^3/_8$	1
	HRP-38-250	Roll Pin, $^3/_8$ x $2^1/_2$	1
20	HB-58-11-200	Hex Bolt, $^5/_8$ - 11 x 2	1
	HMB-58-14	Machine Bushing, $^5/_8$ x 14GA	3
	HNCL-58-11	Center Nylon Lock Nut, $^5/_8$ - 11	1
21	HNA-100-14	Slotted Hex Nut, 1 - 14	2
22	48-148	Right Adjustment Sleeve	1
	HMB-34-14	Machine Bushing, $^3/_4$ x 14GA	1
	HMB-34-10	Machine Bushing, $^3/_4$ x 10GA	4
	HP-18-150	Cotter Pin, $^1/_8$ x $1^1/_2$	1
23	HMB-100-14	Machine Bushing, 1 x 14GA	2
	HNA-100-14	Slotted Hex Nut, 1 - 14	2
	HP-18-150	Cotter Pin, $^1/_8$ x $1^1/_2$	2
24	76-215	Right Hinge Strap (Shown)	1
	76-216	Left Hinge Strap	1
25	75-569	Swivel Pin	2
26	76-413	Right Tailgate Dump Bar	1

*Spacer **MUST** be to the outside of the tab on the Pivot Arm with the tab and the spacer inside the cylinder yoke.

(Continued on next page)

HOPPER DRAWING

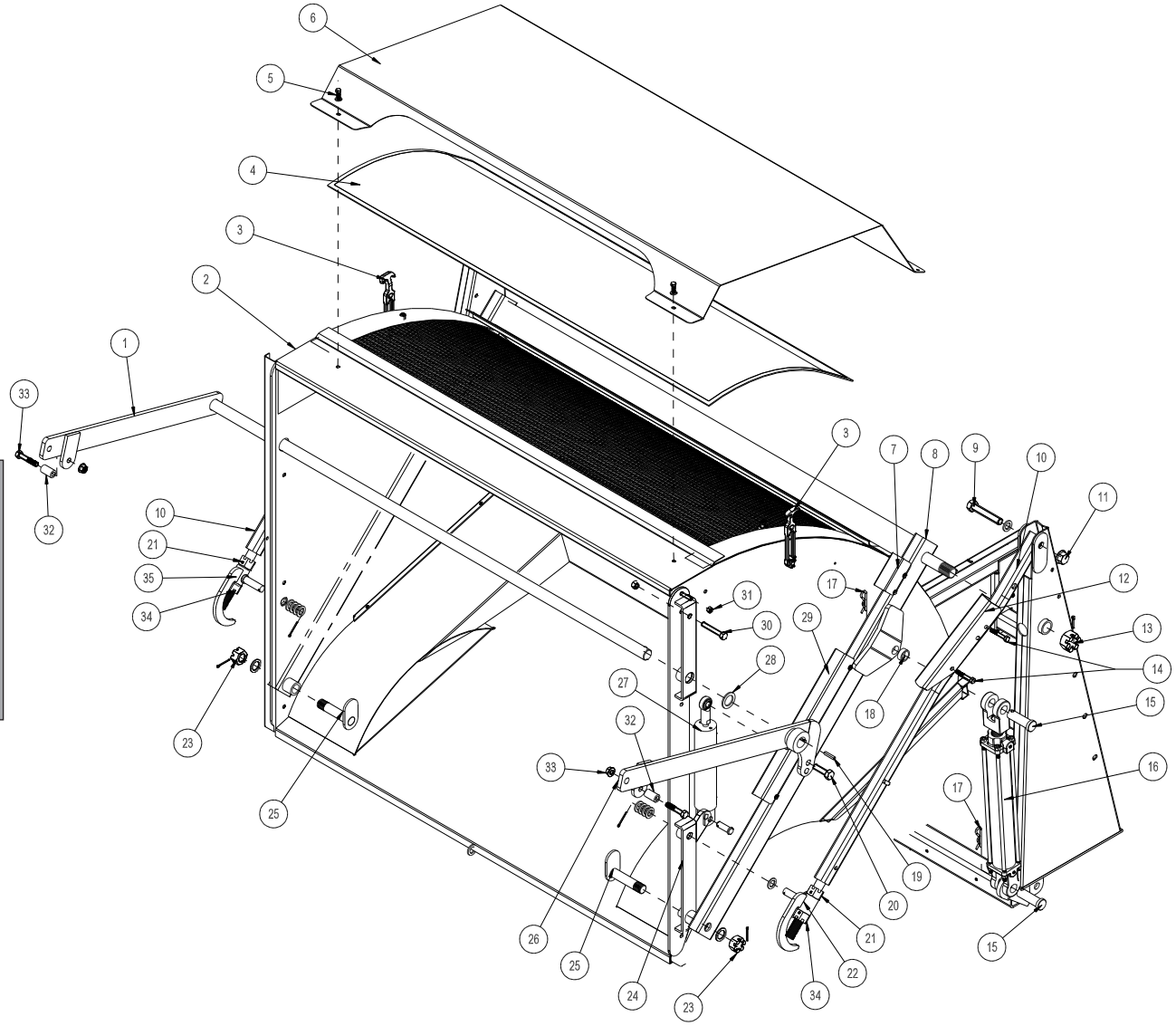

Parts

REF#	PART#	DESCRIPTION	QUANTITY
27	77-263	Hydraulic Cylinder	1
	18-168	Elbow	2
	18-154	Rod End	1
	HG-14-28-180	Grease Fitting, $^1/_4$ - 28 x 180° (part of rod end)	1
	HCP-58-175	Clevis Pin, $^5/_8$ x $1^3/_4$	1
	HHP-18	Bridge Pin, $^1/_8$	1
28	HMB-114-10	Machine Bushing, $1^1/_4$ x 10 GA	2 As Req'd
29	76-159	Hose Guard, Long	1
30	HB-12-13-300	Hex Bolt, $^1/_2$ - 13 x 3	2
	HN-12-13	Hex Nut, $^1/_2$ - 13	2
	HNCL-12-13	Center Nylon Lock Nut, $^1/_2$ - 13	2
31	HNCL-38-16	Center Nylon Lock Nut, $^3/_8$ - 16	8
	HB-38-16-100	Hex Bolt, $^3/_8$ - 16 x 1	8
32	42-702	Spacer	2
33	HB-12-13-250	Hex Bolt, $^1/_2$ -13 x $2^1/_2$	2
	HNCL-12-13	Center Nylon Lock Nut, $^1/_2$ - 13	2
34	HNA-100-14	Castle Nut, 1 -14	2
35	48-153	Left Adjustment Sleeve	1
	HMB-34-14	Machine Bushing, $^3/_4$ x 14GA	1
	HMB-34-10	Machine Bushing, $^3/_4$ x 10GA	4
	HP-18-150	Cotter Pin, $^1/_8$ x $1^1/_2$	1
NS	8842-14	Foam Tape	2
	8947-60	Trim Seal	2

TAILGATE DRAWING

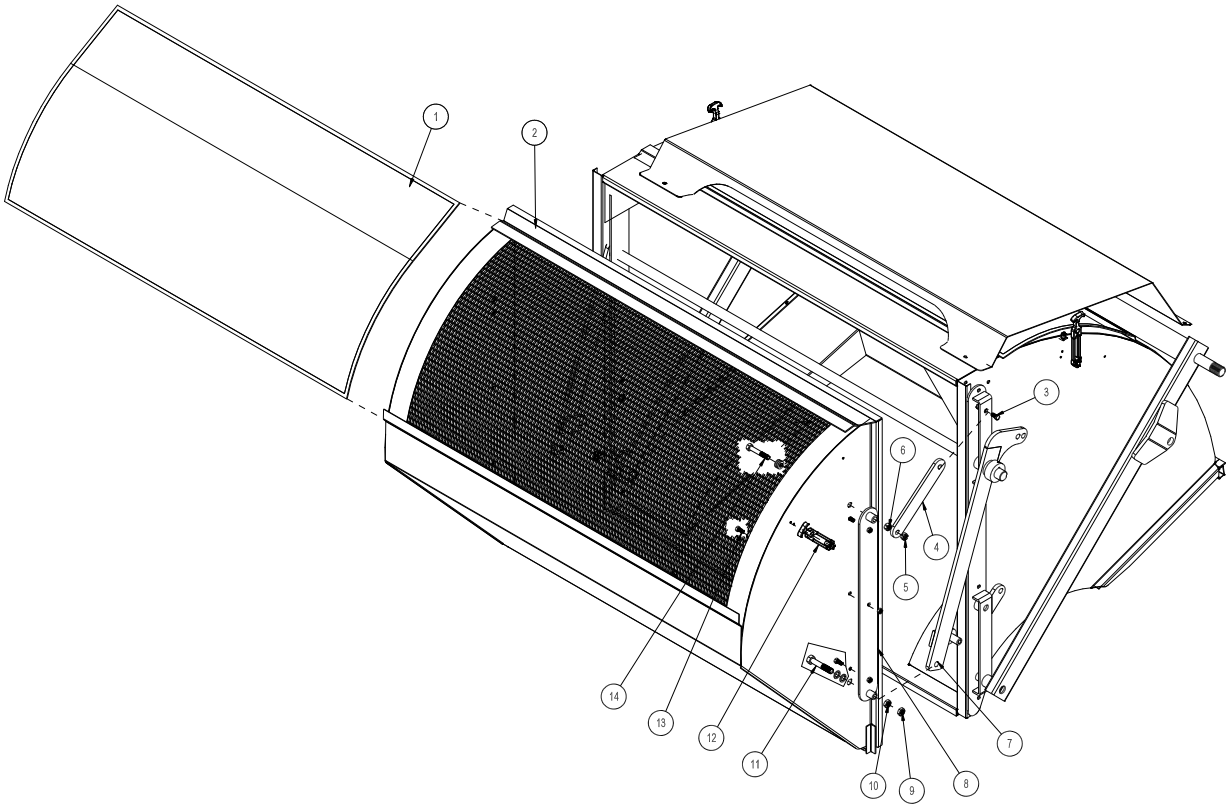

REF#	PART#	DESCRIPTION	QUANTITY
1	76-262	Tailgate Screen	1
2	76-243	Tailgate	1
3	HB-12-13-300	Hex Bolt, $^1/_2$ - 13 x 3	2
	HN-12-13	Hex Nut, $^1/_2$ - 13	2
	HNCL-12-13	Center Nylon Lock Nut, $^1/_2$ - 13	2
4	75-564	Tailgate Hinge	2
5	HNCL-12-13	Center Nylon Lock Nut, $^1/_2$ - 13	2
6	HN-12-13	Hex Nut, $^1/_2$ - 13	2
7	76-413	Right Tailgate Dump Bar	1
8	75-565	Tailgate Hinge Strap	2
9	HNCL-58-11	Center Nylon Lock Nut, $^5/_8$ - 11	2
10	HNJ-58-18	Jam Nut, $^5/_8$ - 18	2
11	HB-58-18-325	Hex Bolt, $^5/_8$ - 18 x $3^1/_4$	2
	HMB-58-14	Machine Bushing, $^5/_8$ x 14GA	10
12	15-437	Latch	2
	HRS-316-1125	Rivet, $^3/_{16}$ x $1^1/_8$	4
	HRS-316-100	Rivet, $^3/_{16}$ x 1	2
	HRW-316	Rivet Washer, $^3/_{16}$	6
	HW-316	Flat Washer, $^3/_{16}$	4
13	HNCL-38-16	Center Nylon Lock Nut, $^3/_8$ - 16	6
	HB-38-16-100	Hex Bolt, $^3/_8$ - 16 x 1	6
14	HB-12-13-300	Hex Bolt, $^1/_2$ - 13 x 3	2
	HMB-12-14	Machine Bushing, $^1/_2$ x 14GA	6

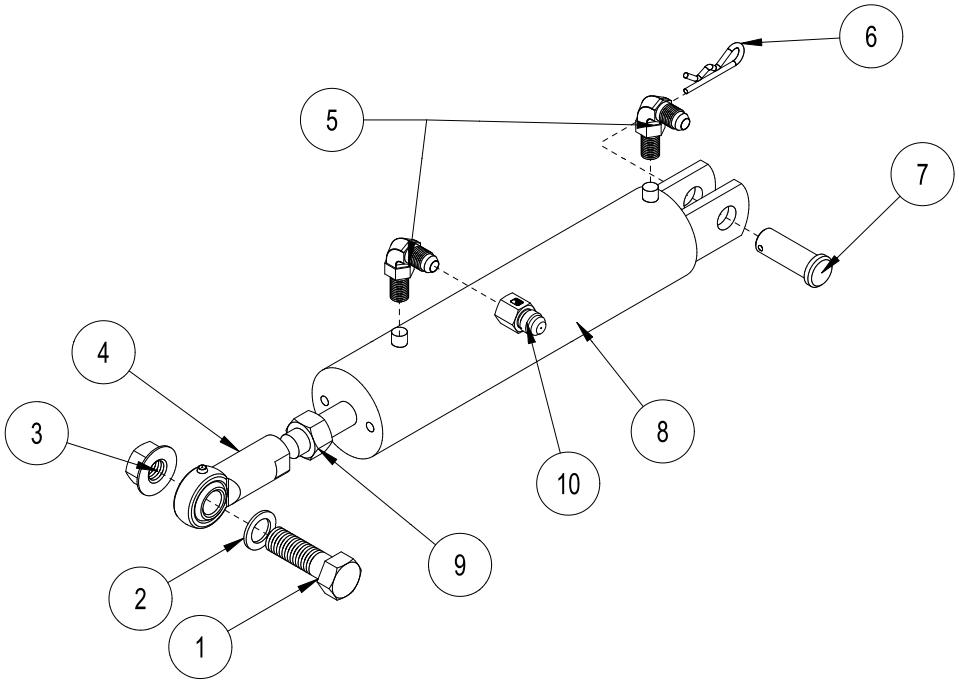

REF#	PART#	DESCRIPTION	QUANTITY
1	HB-58-11-200	Hex Bolt, 5/8 - 11 x 2	1
2	HMB-58-14	Machine Bushing, 5/8 - 14GA	1
3	HNTL-58-11	Nylon Lock Nut, 5/8 - 11GA	1
4	18-154	Rod End	1
	HG-14-28-180	Grease Fitting, 1/4 - 28 x 180°	1
5	18-168	Elbow	2
6	HHP-18	Bridge Pin, 1/8	1
7	HCP-58-175	Clevis Pin, 5/8 x 1 3/4	1
8	77-263	Hydraulic Cylinder	1
	14-530	Seal Kit	1
9	HNJ-58-18	Jam Nut, 5/8 -18	1
10	18-392	Orifice Adapter	1

48-267 HYDROSTATIC PUMP DRAWING

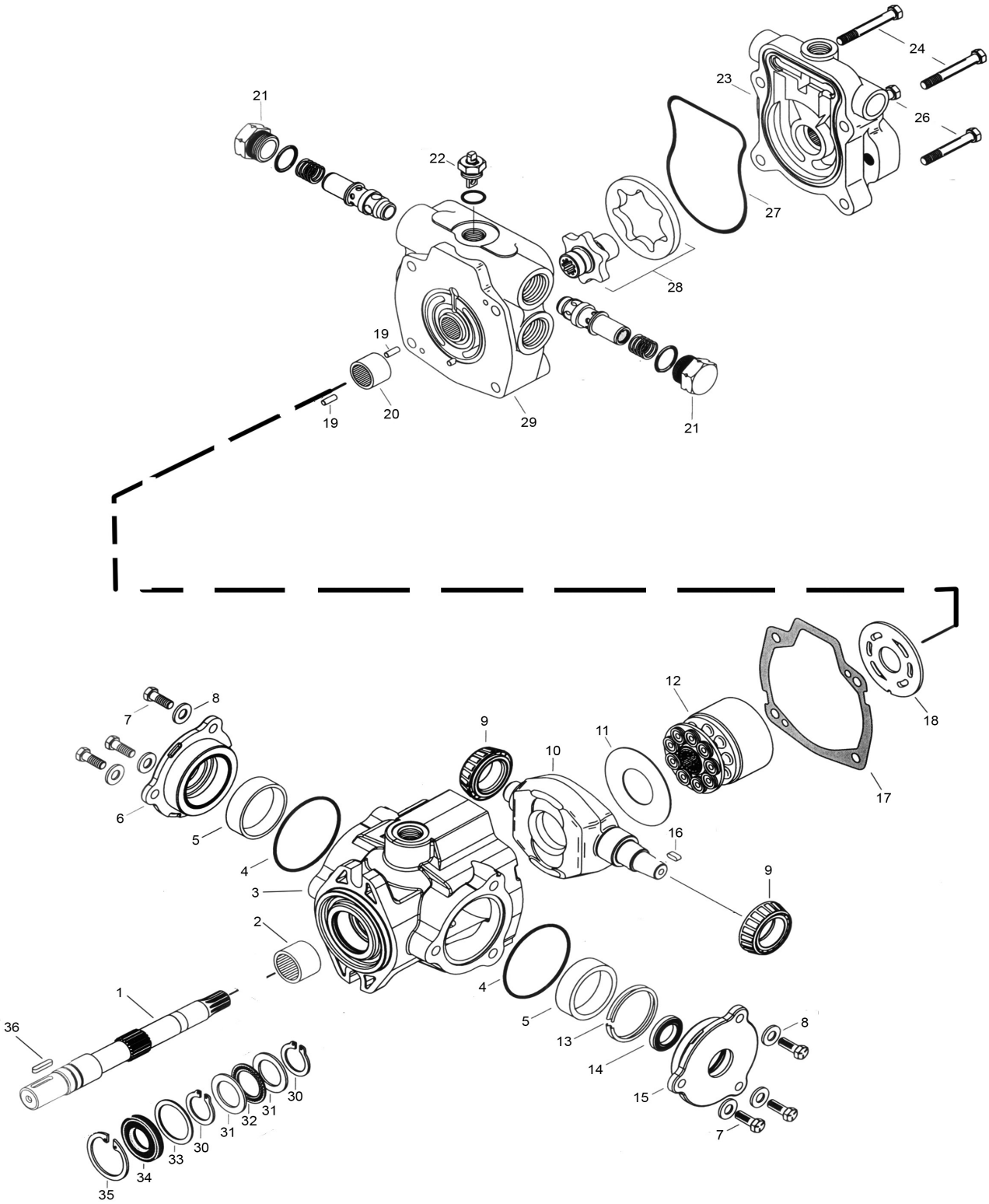

Parts

48-267 HYDROSTATIC PUMP PARTS LIST

REF#	PART#	DESCRIPTION	QUANTITY
1	76-398-01	Drive Shaft (splined)	1
2	60-343-08	Needle Bearing (with housing)	1
3	77-239-01	Housing	1
4	77-239-02	O-Ring	1
5	77-239-03	Thrust Bearing	2
6	77-239-04	Trunnion Cover	1
7	77-239-05	Pan Head Screw	2
8	77-239-06	Washer	6
9	77-239-07	Cone Bearing	2
10	77-239-08	Cam Plate	1
11	77-239-09	Swash Plate Insert	1
12	60-343-21	Rotating Kit	1
13	77-239-10	Crush Ring	1
14*	60-343-12	Shaft Seal	1
15	77-239-11	Seal Cover	1
16	77-239-12	Key	1
17*	77-239-13	Gasket	1
18		Back Plate	1
19	33-058-27	Dowel Pin	2
20	60-343-23	Bearing	1
21	77-239-15	Relief Valve	2
22	77-239-16	Tow Valve Assembly	1
23		Charge Pump Adapter	1
24	77-239-17	Cap Screw	2
26	77-239-18	Cap Screw	2
27*	77-239-19	O-Ring	1
28		Gerotor and Coupler	1
29	77-239-20	End cover Assembly	1
30*	77-239-21	Retaining Ring	2
31	60-343-05	Bearing Race	1
32	60-343-06	Thrust Bearing	1
33	60-343-03	Washer	2
34*	60-343-02	Shaft Seal	1
35*	60-343-01	Retaining Ring	1

*	77-239-23	Seal Repair Kit

48-266 GEAR PUMP

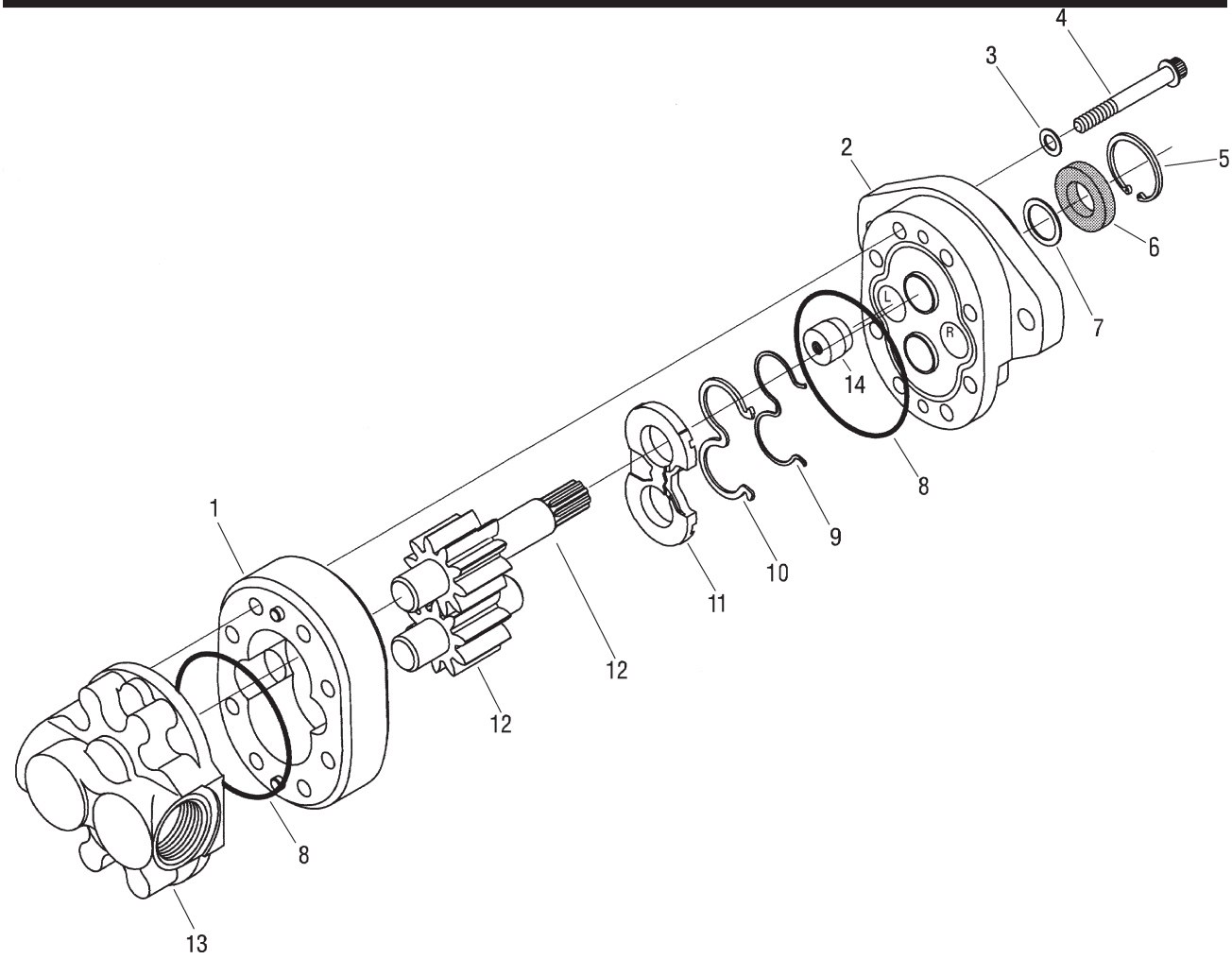

REF#	PART#	DESCRIPTION	QUANTITY
1		Body	1
2	76-197-01	Front Plate	1
3*		Washer	4
4	76-197-06	Cap Screw	8
5	76-197-07	Retaining Ring	1
6*		Shaft Seal	1
7	33-061-15	Washer	1
8*		O-Ring	2
9*		Backup Gasket	1
10*		Seal	1
11*		Wear Plate	1
12	76-197-04	Shaft (comes with Idler Gear)	1
13	76-197-02	Back Plate	1
14*		Plug	1
*	76-197-08	Seal Kit	

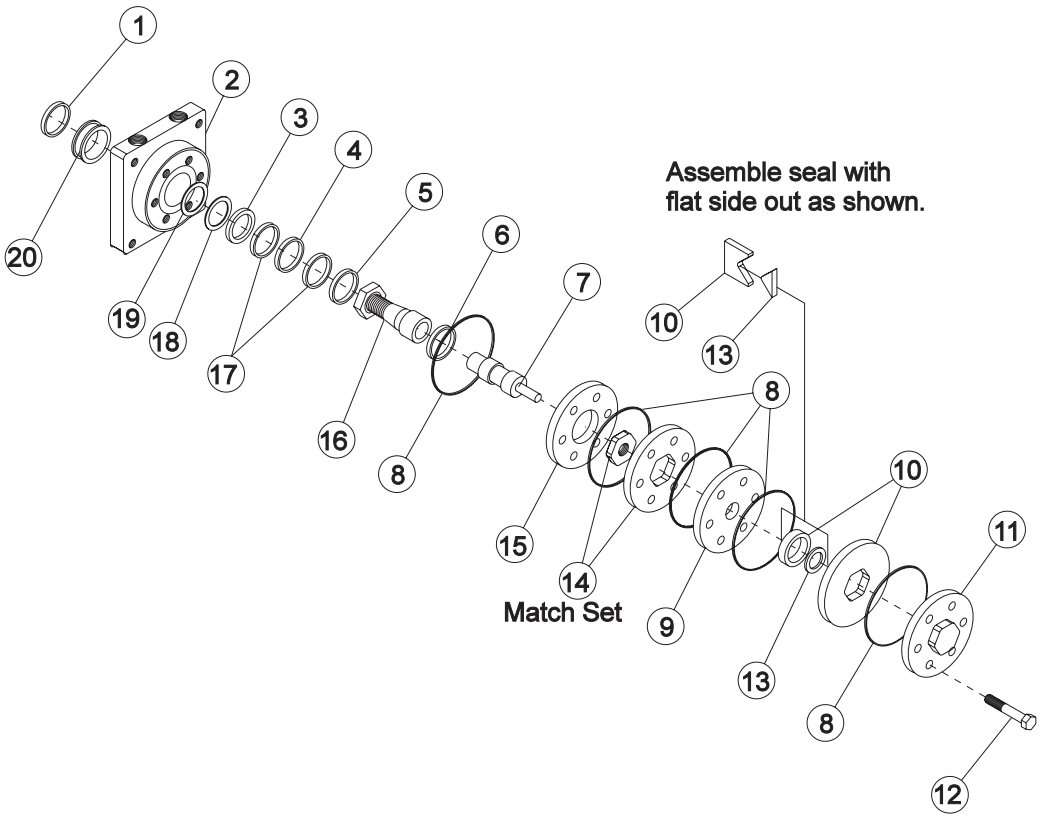

REF#	PART#	DESCRIPTION	QUANTITY
1*		Water & Dirt Seal	1
2†	13-615-05	Service Housing Assembly	1
3*		Inner Seal	1
4†	13-032-27	Thrust Bearing	1
5†	13-032-28	Inner Bearing	1
6	13-032-29	Thrust Bearing	1
7	76-238-03	Drive Link	1
8*		Ring Seal	5
9	13-032-31	Manifold	1
10	13-032-32	Commulator Assembly (matched set)	1
11	13-032-33	End Cover	1
12	76-238-01	Hex Bolt	7
13*		Commulator Seal (matches with #10)	1
14	76-238-02	Rotor Set (matched set)	1
15	13-032-35	Plate Wear	1
16	13-615-04	Coupling Shaft	1
	HWK-516-100	Woodruff Key, $^{5}/_{16}$ x 1	1
	14-265	Nut, 1 - 20	1
17†	13-032-37	Thrust Washer	2
18*		Backup Washer	1
19*		Backup Washer	1
20†	13-032-38	Outer Bearing	1
*	14-080	Seal Kit	1
†	Included in 13-615-05 Service Housing Assembly		

34-103 ORBITAL DRAWING

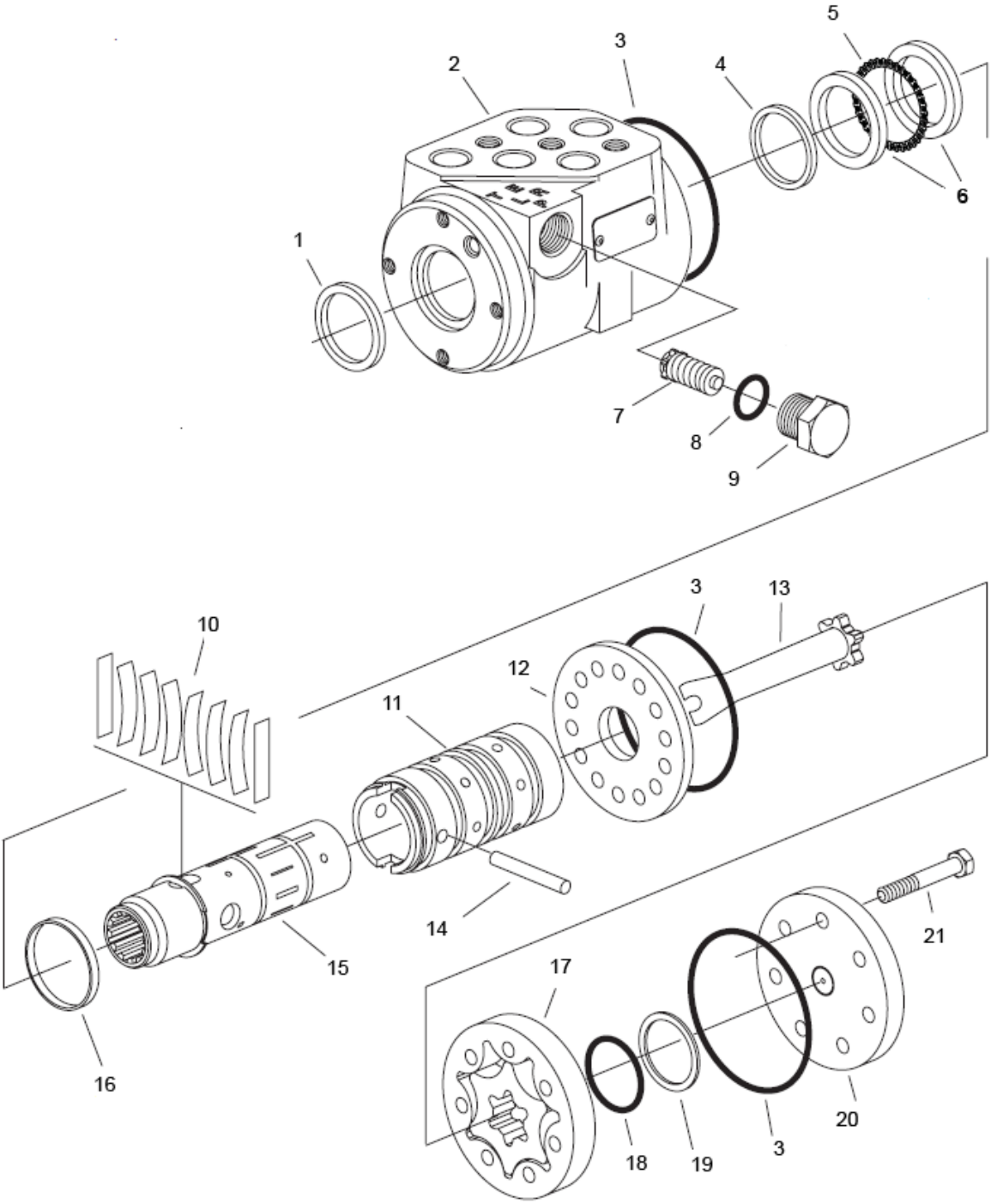

34-103 ORBITAL PARTS LIST

REF #	PART #	DESCRIPTION	QUANTITY
1**		Dust Seal	1
2		Housing	1
3**		O-Ring Seal	3
4**		Quad Seal	1
5	10-576-03	Thrust Bearing	1
6	10-576-02	Bearing Race	2
7		Manual Steering Relief Valve	1
8**		O-ring	1
9		Plug	1
10‡		Standard Torque Centering Springs	1
11		Sleeve	1
12	15-301-06	Wear Plate	1
13	10-576-01	Drive	1
14	15-301-08	Drive Pin	1
15		Spool	1
16‡		Spring Retaining Ring	1
17	34-103-01	Gerotor	1
18**		O-Ring	1
19**		Seal Ring	1
20	15-301-03	End Cap	1
21	10-576-06	Cap Screw	7
**	15-301-01	Seal Kit	1
‡	15-301-15	Centering Spring Kit	1

ORBITAL SPECIFICATIONS

Inlet Relief Valve Setting	1020 psi (70 bar)
Nominal Flow	3 gpm (11lpm)
Displacement	6.1 cu. in/ R (100 cu cm/R)
Check Valve for Manual Steering	Yes
Return Pressure Rating	145 psi (10 bar) Maximum
Fluid	SAE 10W-40 API Service SJ or higher Motor Oil
Ports	$^{9}/_{16}$ - 18 SAE O-Ring 4 Ports

76-673 3 -BANK HYDRAULIC VALVE

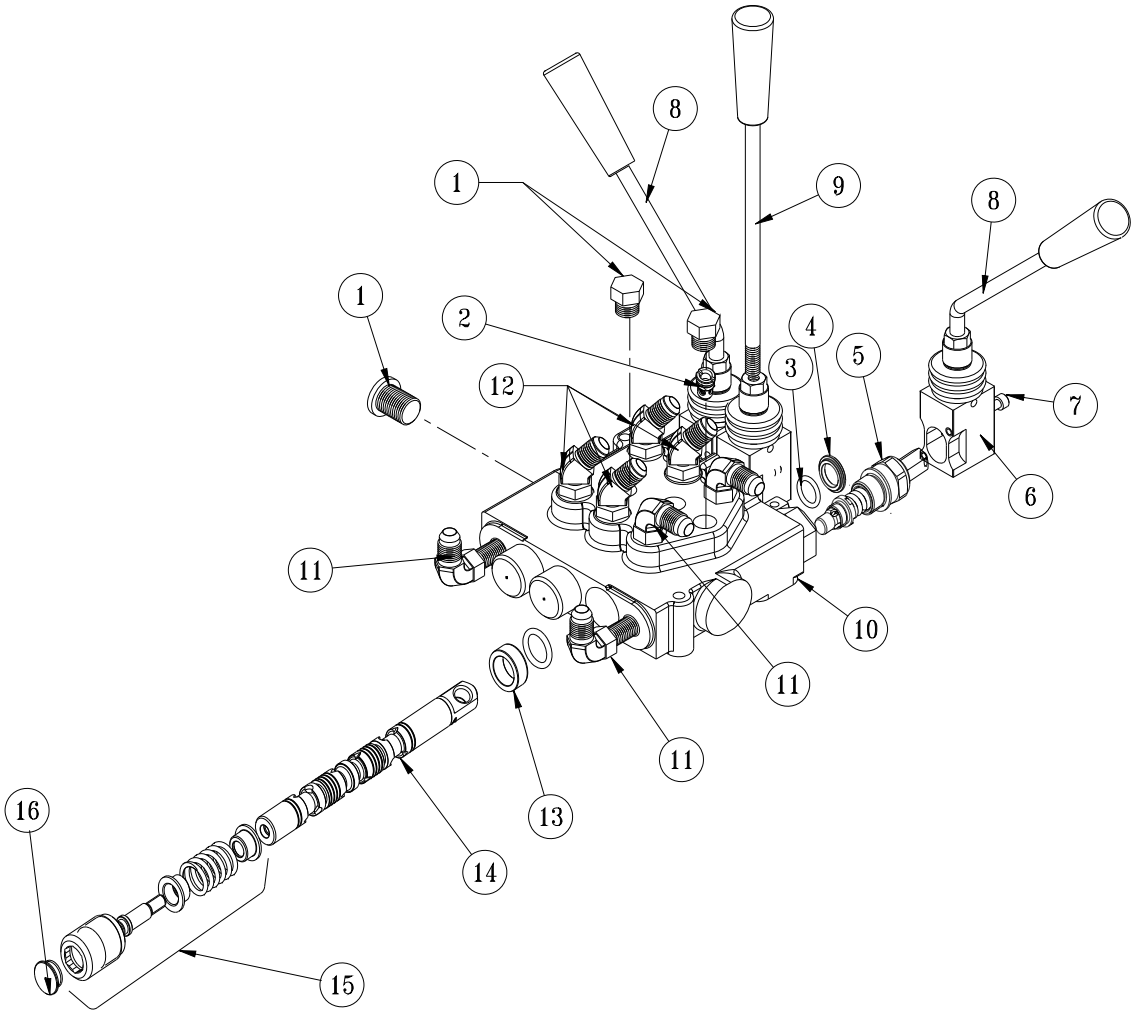

REF#	PART#	DESCRIPTION	QUANTITY
1*	78-415-13	3/4 - 16 SAE 8 Screw Plug	3
2*	78-415-12	Check Valve Assembly HDM12	1
3*	78-415-03	O-Ring Seal	6
4*	78-415-04	Flanged Washer HDM10	3
5*	78-415-02	Spool HDM10	1
6*	78-415-09	Lever Group HDS11	3
7*	78-415-10	Metric Socket Screw M5 x .8 x 45	6
8	78-858	Bent Handle - 25°	2
9	78-417	Straight Handle	1
10*	48-258-01	Body (complete with spacer and check valve)	1
11	18-168	Straight Thread Connectors	4
12	18-188	Straight Thread 45° Elbow	4
13*	78-415-05	Spacer	3
14*	78-415-06	A Type Spool HDS11	3
15*	78-415-11	Positioner HDM10	3
16*	78-415-08	Plug	3

*	76-673	3 – Bank Hydraulic Valve (includes all * items)

NOTES

76-751 DUST/DIRT FILTRATION SYSTEM

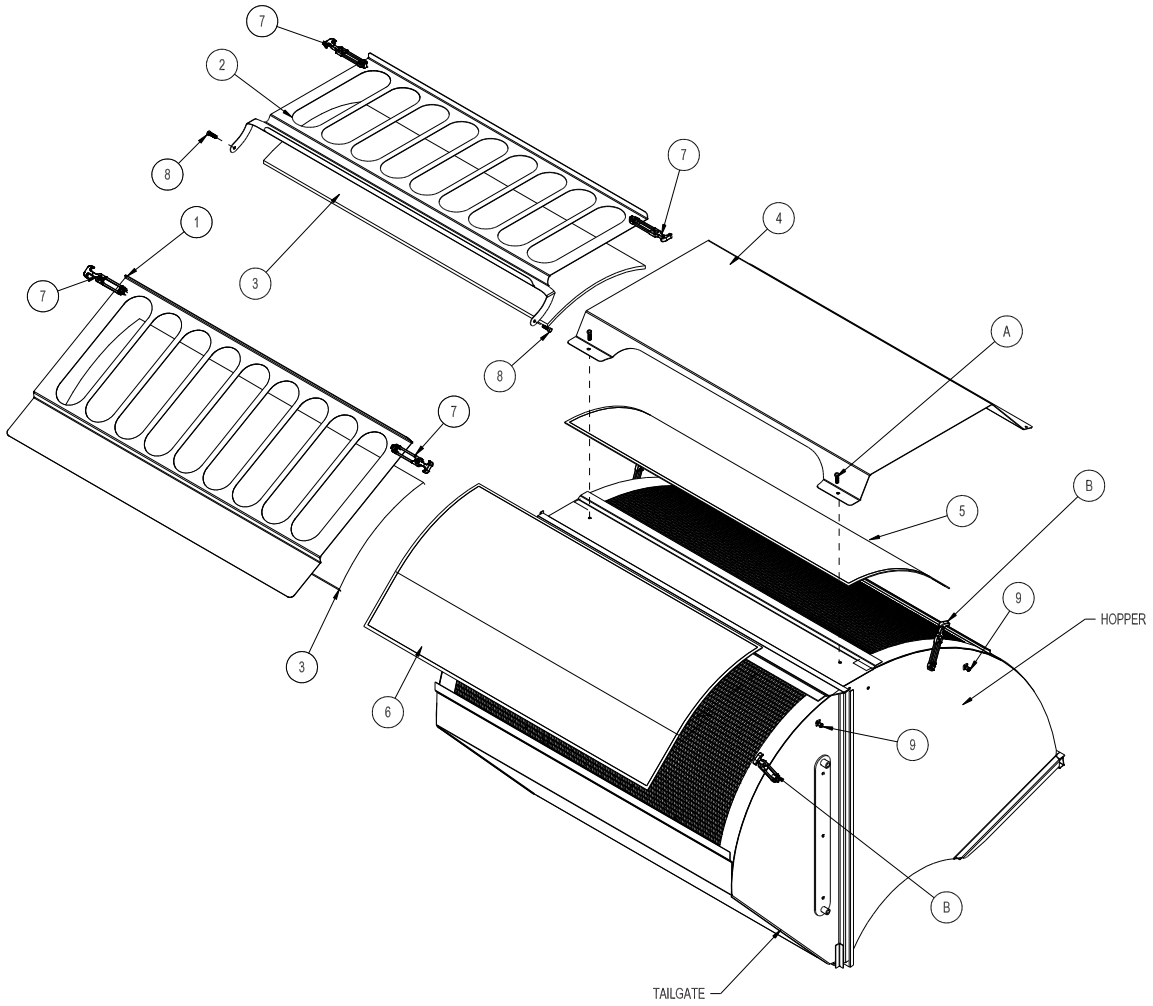

76-751 DUST/DIRT FILTRATION SYSTEM

REF#	PART#	DESCRIPTION	QUANTITY
1	76-622	Tailgate Screen Cover	1
2	76-623	Top Filter Cover	1
3	76-624	Hog Hair Filter (20 x 58)	2
4	76-263	Hopper Screen Cover (Remove)	1
5	76-261	Hopper Screen (Remove)	1
6	76-262	Tailgate Screen (Remove)	1
7	15-437-02	Latch	4
	HSM-10-32-100	Hex Bolt, #10 - 32 x 1	8
	HNFL-10-32	Flange Whiz-loc Nut, #10 - 32	8
8	HB-38-16-125	Hex Bolt, $^3/_8$ - 16 x $1^1/_4$	2
	HN-38-16	Hex Nut, $^3/_8$ - 16	2
	HNTL-38-16	Nylon Lock Nut, $^3/_8$ - 16	2
9	15-437-01	Keeper	4
	HSM-10-32-100	Hex Bolt, #10 - 32 x 1	4
	HNFL-10-32	Flange Whiz-loc Nut, #10 - 32	4
	15-437	Rubber Latch and Keeper	4
NS	8980-60	Trim Edge	1

INSTALLATION INSTRUCTIONS

1. Release rubber latches (Ref B) holding tailgate screen in place.
2. Remove tailgate screen (Ref 6) from tailgate. Unwedge the top and lift out of the bottom tab.
3. Install latches (Ref7) to both sides of the tailgate screen cover and keeper (Ref 9) to tailgate sides using #10-32 Hex Bolts and nuts on the bracket end.
4. First, place the hog hair blue filter (Ref 3) onto the tailgate screen, then place tailgate screen cover (Ref 1) over the top of the hog hair filter by placing the screen into the bottom tab and wedging it against the top of the tailgate. Then hook latches to keepers to holds in place.
5. Remove Hex Bolts (Ref A) holding the hopper screen cover (Ref 4) to hopper .
6. Remove the hopper screen (Ref 5) from the hopper by unwedging the top and pulling it out the bottom tab.
7. Place top filter cover (Ref 2) over the hopper screen opening. Secure with $^3/_8$ - 16 Hex Bolts, nuts and lock nuts (Ref 8) . Tighten locknut so top filter cover can still hinge on the Hex Bolts.
8. Install latches (Ref 7) onto the filter cover (Ref 2) and the keepers (Ref 9) to the sides of the hopper using the 10-32 Hex Bolts and nuts.
9. Install the 8980-60 trim edge onto the top of the hopper screen opening.
10. Place the hog hair filter (Ref 5) onto the hopper screen. Lower top filter cover an hook latches to the keepers.

DECAL LOCATION

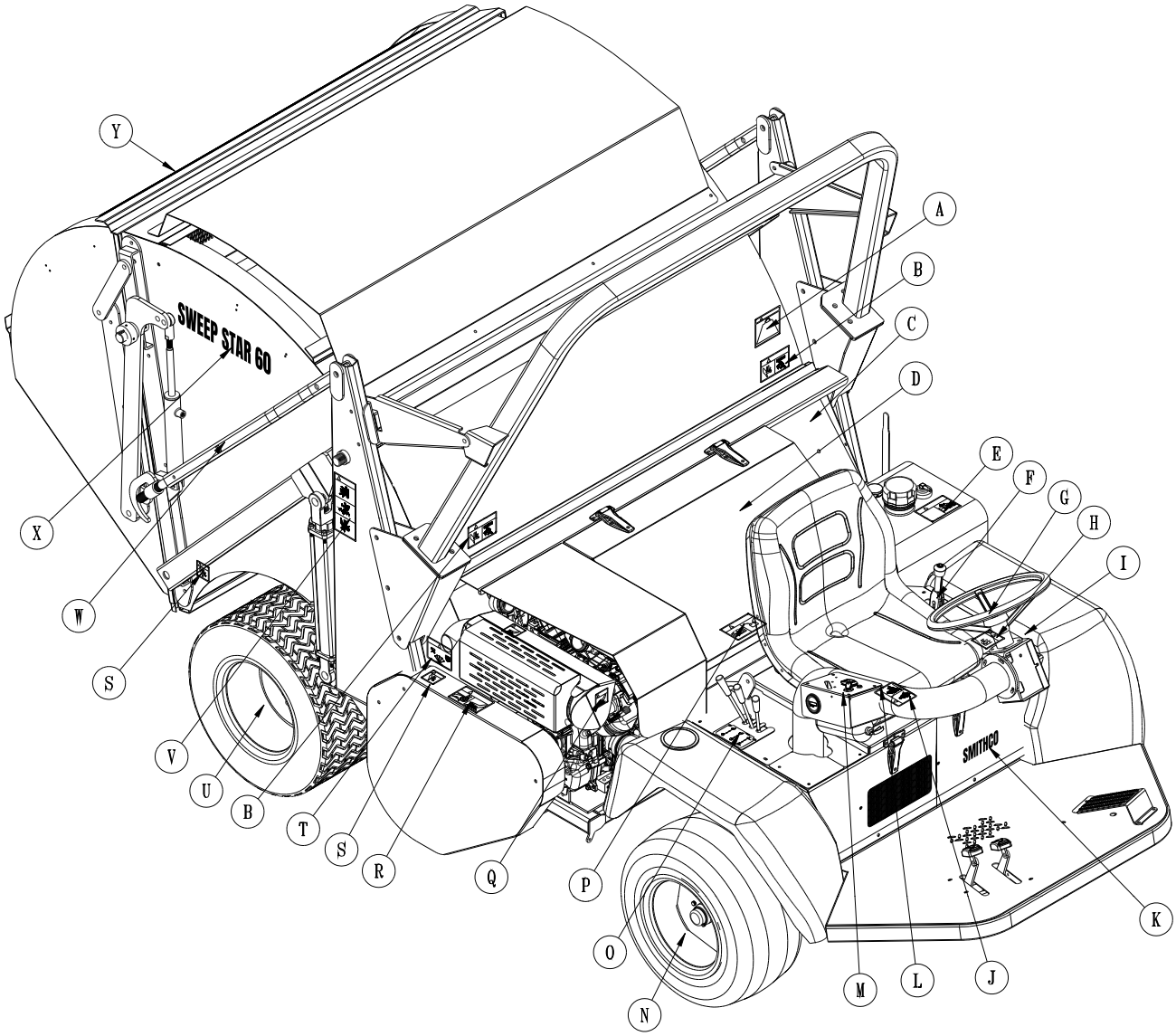

DECAL LIST

This is a list of decals located on the Sweep Star 60. Part number, description and location will help in reordering decals.

A*	25-320	Decal, Warning Load Limit	Left Front Hopper
B*	76-304	Decal, Crush/Pinch	R&L Front Hopper
C	25-362	Decal, Fire Danger	LH Front Reel Panel
D	76-853	Decal, Reel Height Indicator	Reel Lift Cylinder Bracket
E*	25-307	Decal, Refuel w/ Gasoline	Gas Tank
F	51-184	Decal, Park Brake	LH Side Panel
G	27-077	Decal, Smithco Round	Steering Wheel Cap
H*	27-093	Decal, Hydraulic Oil	LH Side Panel
I	25-376	Decal, dbA 98	LH Side Panel
J*	25-313	Decal, Seat Belt/Slope	Control Arm
K	34-147	Decal, Smithco	Front Seat Panel
L	25-390	Decal, Hearing Protection	Control Arm
M	76-763	Decal, Control Panel	Control Box
N	25-356	Decal, Tire Pressure 20 PSI	Front Tires
O	76-764	Decal, Valve Handle	RH Side Panel
P*	25-277	Decal, Battery	Rear Seat Trim Panel
Q	25-298	Decal, Warning Hot	Front & Top Muffler Bracket
R*	16-088	Decal, Hot/Rotating Parts	Top Belt Guard
S*	25-286	Decal, Pinch Point	Top Belt Guard/R&L Hopper Bottom
T*	76-305	Decal, Moving Parts	RH & LH Side Reel Panel
U	25-355	Decal, Tire Pressure 18 PSI	Rear Tires
V*	76-307	Decal, Tower Warning	R&L Hopper Tower
W	75-651	Decal, Hopper Lift Safety	Hopper Lift Safety Bar
X	76-417	Decal, Sweep Star 60	R&L Hopper Side
Y	25-359	Decal, Smithco 17"	Tailgate

*	48-136	Decal, Sweeper Sheet (includes all * items)

QUICK REFERENCE REPLACEMENT PARTS

REPLACEMENT FILTERS

23-031	Hydraulic Oil Filter Element	
76-487	Engine Oil filter	Briggs # 842921
76-395-01	Air Cleaner Cartridge	Briggs # 841497
76-395-02	Safety Filter Cartridge	Briggs # 821136
50-403	Fuel Filter	

REPLACEMENT BELTS

76-767	Belt, 2/A66

SEAL KITS

34-103	Power Steering Orbital Motor
15-301-01	Seal Kit
76-673	3-Bank Hydraulic Valve
14-096	O-Ring Seal Kit
48-267	Hydrostatic Pump
77-239-22	Seal Kit
76-539	Reel Motor
30-101-11	Seal Kit
48-266	Gear Pump
76-197-08	Seal Kit
76-238	Wheel Motor
14-080	Seal Kit
77-263	Hydraulic Cylinder (Tailgate)
14-530	Seal Kit
76-627	Hydraulic Cylinder (Hopper)
76-242-01	Seal Kit
15-839	Hydraulic Cylinder (Steering)
15-839-01	Seal Kit
76-478	Hydraulic Cylinder (Reel)
14-531	Seal Kit

FLUIDS

Engine Oil	SJ or Higher 10W-30
Hydraulic Fluid	SJ or Higher 10W-40

OTHER PARTS

13-488	Key Switch
76-354	$2^1/_2$ # ABC Dry Chemical Fire Extinguisher

The Smithco Commercial Products Two-Year Limited Warranty

Smithco, Inc. (Smithco) warrants your 2016 or newer Smithco Commercial Product ("Product") purchased after October 1, 2016 to be free from defects in materials or workmanship for the period of time listed below. Where a warrantable condition exists, Smithco will repair the Product at no cost to you including diagnosis, labor (at the Smithco standard labor rate, subject to the Smithco flat rate schedule), and parts.

Warranty Duration is:

(1) Two years, 1500 operational hours* from the date of delivery to the original purchaser or Five years from the date of original manufacturer of the product, whichever occurs first. (*Products equipped with hour meter).

(2) Products used in rental situations are covered for 90 days from date of delivery to original user/renter.

Owner Responsibilities:

As the Product owner, you are responsible for required maintenance and adjustments stated in your Owner's Manual. Failure to perform required maintenance and adjustments can be grounds for disallowing a warranty claim. **You are particularly responsible to train all present and future operators of this product on the safe operation of this product at your location.**

Instructions for Obtaining Warranty Service:

You are responsible for notifying the Authorized Smithco Products Distributor from whom you purchased the Product as soon as you believe a warrantable condition exists and not later than 30 days from discovery of the condition.

If you need help locating an Authorized Smithco Distributor, or if you have questions regarding your warranty rights or responsibilities, you may contact us at:

Smithco Product Support Department
200 West Poplar Ave.
Cameron, Wisconsin 54822
Telephone: 800-891-9435 E-Mail: ProductSupport@Smithco.com

Maintenance Parts:

Parts scheduled for replacement as required maintenance ("Maintenance Parts"), are warranted for the period of time up to the scheduled replacement time for that part.

Items/Conditions Not Covered:

Not all product failures or malfunctions that occur during the warranty period are defects in materials or workmanship. The items/conditions listed below are not covered by this warranty:

- Product failures which result from the use of non-Smithco replacement parts, or from installation and use of add-on, modified, or unapproved accessories are not covered.
- Product failures which result from failure to perform required maintenance and/or adjustments are not covered.
- Product failures that result from operating the Product in an abusive, negligent or reckless manner are noT covered.
- This warranty does not apply to parts subject to consumption through use, unless found to be defective. Examples of parts which are consumed, or used up, during normal Product operation include, but are not limited to: blades, tines, teeth, scarifiers, rakes, plates, wear plates, castor wheels, tires, batteries, filters, belts, nozzles, etc.

- This warranty does not apply to failures caused by outside influence. Items considered to be outside influence include, but are not limited to, weather, storage practices, contamination, use of unapproved coolants, lubricants, additives, or chemicals, etc.

- This warranty does not apply to normal “wear and tear” items. Normal “Wear and Tear” includes, but is not limited to, damage to seats due to wear or abrasion, worn painted surfaces, scratched decals or windows, etc.

- Smithco may require the return of failed parts or components in order to determine the validity of any warranty claim.

- Smithco will not be obligated to replace components of other manufacturers if inspection by the original component manufacturer indicates that failure was due to normal wear and tear, expected consumption through use or improper care or service.

Other Legal Disclaimers:

The above remedy for product defects through repair or replacement by an authorized Smithco distributor or dealer is the purchaser’s sole remedy for any defect. This warranty gives you specific legal rights, and you may also have other rights which vary from state to state.

THERE ARE NO OTHER EXPRESS WARRANTIES OTHER THAN THOSE SET FORTH ABOVE. ALL IMPLIED WARRANTIES OF MERCHANTABILITY AND FITNESS FOR USE ARE LIMITED TO THE DURATION OF THE LIMITED WARRANTIES CONTAINED HEREIN.

Some states may not allow limitations on how long an implied warranty lasts, so the above limitation may not apply to you.

THE SMITHCO COMPANY IS NOT LIABLE FOR INDIRECT, INCIDENTAL OR CONSEQUENTIAL DAMAGES IN CONNECTION WITH THE USE OF THE PRODUCT, INCLUDING ANY COST OR EXPENSE OF PROVIDING A SUBSTITUTE PRODUCT OR SERVICE DURING PERIODS OF MALFUNCTION OR NON-USE.

Some states may not allow the exclusion of indirect, incidental or consequential damages, so the above exclusion may not apply to you.

Smithco neither assumes, nor authorizes any person to assume for it, any other liability in connection with the sale or use of this product.

Smithco
Wayne, PA 19087 www.smithco.com