Operator's



V62-V Turf Vac

Model 78-500-A

Sn: VAC101

November 2017

Product Support: ***Hwy SS & Poplar Ave; Cameron WI 54822***
1-800-891-9435 productsupport@smithco.com

Introduction

Service

Diagrams

CONTENTS

Introduction 1-7
Introduction 1
Symbols 2
Safety.....3
Safety Decals.....4
Safe Practices.....5
Specifications 6
Setup.....7
Service.....9-11
Operation 8-9
Battery.....10
Diagrams 12-13
Wiring Drawing..... 12-13
Other.....14
Declaration of Incorporation 14
Warranty .....

INTRODUCTION

Thank you for purchasing a ***Smithco*** product.

Read this manual and all other manuals pertaining to the Turf Vac carefully as they contain safety, operating, assembly and maintenance instructions. Failure to do so could result in personal injury or equipment damage.

Keep manuals in a safe place after operator and maintenance personnel have read them. Right and left sides are from the operator's seat, facing forward.

WARNING:

Engine exhaust and some of its constituents are known to the State of California to cause cancer, birth defects, and other reproductive harm. For more information visit *www.P65Warning.ca.gov*

WARNING

Failure to follow cautious operating practices can result in serious injury to the operator or other persons. The owner must understand these instructions, and must allow only trained persons who understand these instructions to operate this vehicle.

All ***Smithco*** machines have a Serial Number and Model Number. Both numbers are needed when ordering parts. Refer to engine manual for placement of engine serial number.

For product and accessory information, help finding a dealer, or to register your product please contact us at www.Smithco.com.

Information needed when ordering replacement parts:

1. Model Number of machine
2. Serial Number of machine
3. Name and Part Number of part
4. Quantity of parts

For easy access record your Serial and Model numbers here.

SMITHCO

WAYNE, PENNSYLVANIA 19087 USA
610-688-4009 Fax 610-688-6069

CE

SERIAL NO.	kW/hp	DATE OF MFG.

MODEL NO.	lb/kg Empty	lb/kg Full

SYMBOLS

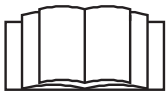
Read Operator's Manual



Engine Stop


Engine Start

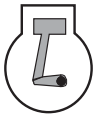
Engine Run


Engine Oil

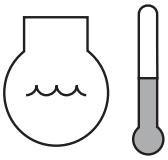
Water Temperature

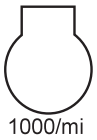

RPM

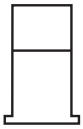
Gasoline



Diesel


Glow Plug


Hour Meter


Hand Throttle


Choke

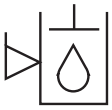
Hydraulic Oil Level

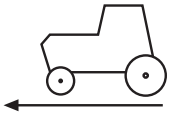
Ground Speed



Park Brake



Park Brake Release


Fast


Slow


Lift Arm

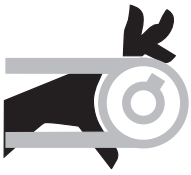
Moving Parts


Pinch Point

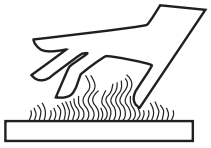
Hot Surface

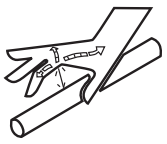
Hydraulic Fluid Penetration


No Riders

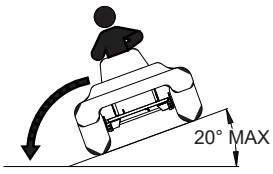

Rollover Danger

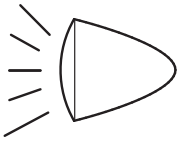
Headlamp

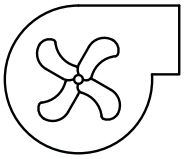
Blower


Warning Danger Caution


Seat Belt

Read and understand this manual and all safety signs before operating and maintaining. Review the safety instructions and precautions annually.

TAKE NOTE! THIS SAFETY ALERT SYMBOL FOUND THROUGHOUT THIS MANUAL IS USED TO CALL YOUR ATTENTION TO INSTRUCTIONS INVOLVING YOUR PERSONAL SAFETY AND THE SAFETY OF OTHERS. FAILURE TO FOLLOW THESE INSTRUCTIONS CAN RESULT IN INJURY OR DEATH.

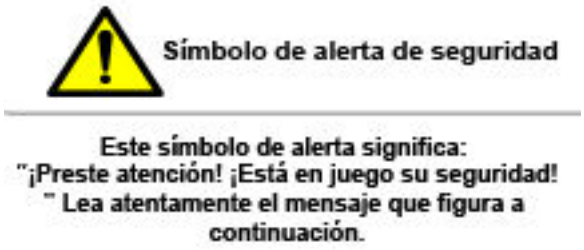

SAFETY SIGNAL WORDS

Note the use of the signal words DANGER, WARNING and CAUTION with the safety messages. The appropriate signal word for each has been selected using the following guidelines:



DANGER: Red. Indicates an imminently hazardous situation that, if not avoided, will result in death or serious injury. This signal word is to be limited to the most extreme situations typically for machine components which, for functional purposes, cannot be guarded.



WARNING: Orange. Indicates a potentially hazardous situation that, if not avoided, could result in death or serious injury, and includes hazards that are exposed when guards are removed. It may also be used to alert against unsafe practices.



CAUTION: Yellow. Indicates a potentially hazardous situation that, if not avoided, may result in minor or moderate injury. It may also be used to alert against unsafe practices.



IMPORTANT: Blue. Indicates procedures which should be followed to avoid damage to the machine.

SAFETY DECAL LOCATION

⚠ WARNING

REMEMBER: **If Safety Decals have been damaged, removed, become illegible or parts replaced without decals, new decals must be applied. New decals are available from your authorized distributor.**

This is a list of decals located on the V62 Turf Vac. Part number, description and location will help in reordering a decals.

A	25-286	Decal, Pinch Point
B	78-407	Decal, Maximum Load Capacity
C	25-298	Decal, Warning Hot
D	76-305	Decal, Rotating Parts
E	25-307	Decal, Gasoline, Refuel
F	25-362	Decal, Danger Fire
G	25-277	Decal, Battery Warning

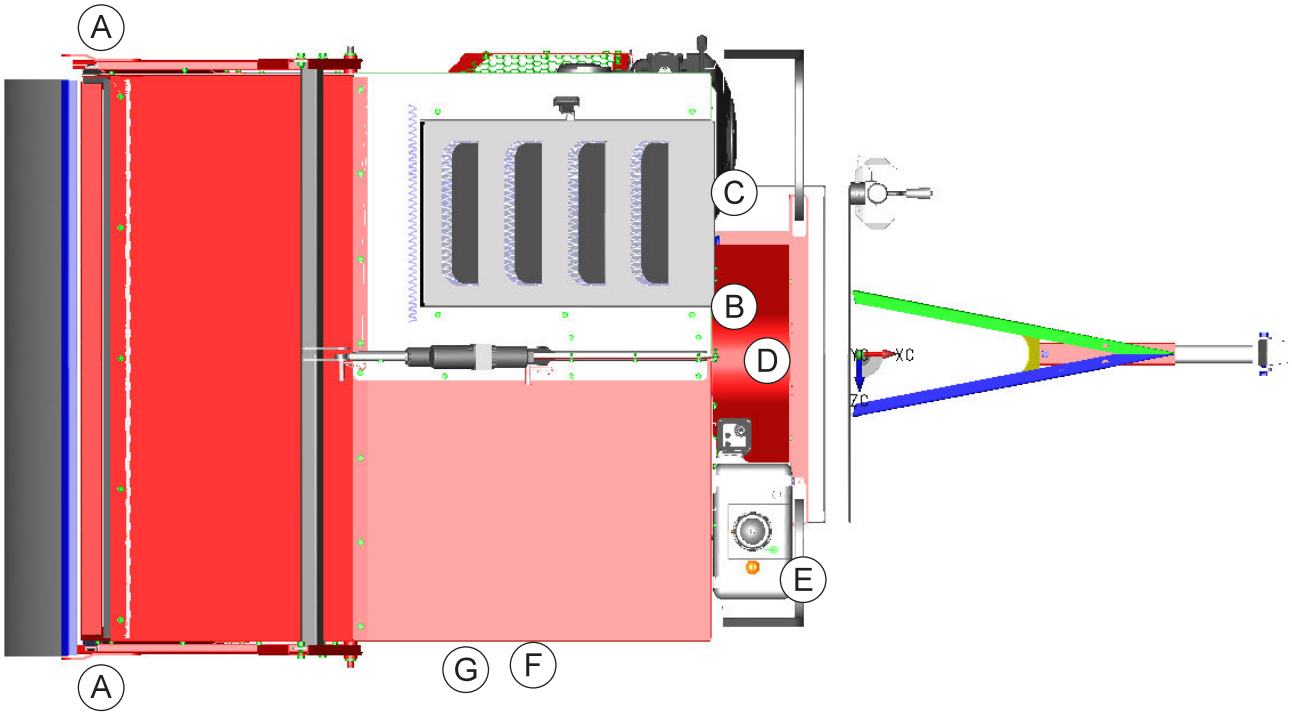

These machines are intended for professional maintenance on golf courses, sports turf, and any other area maintained turf and related trails, paths and lots. No guaranty as to the suitability for any task is expressed or implied.

SAFE PRACTICES

1. It is your responsibility to read this manual and all publications associated with this machine (engine, accessories and attachments).
2. Never allow anyone to operate or service the machine or its attachments without proper training and instructions. Never allow minors to operate any equipment.
3. Learn the proper use of the machine, the location and purpose of all the controls and gauges before you operate the equipment. Working with unfamiliar equipment can lead to accidents.
4. Wear all the necessary protective clothing and personal safety devises to protect your head, eyes, ears, hands and feet. Operate the machine only in daylight or in good artificial light.
5. Inspect the area where the equipment will be used. Beware of overhead obstructions and underground obstacles. Stay alert for hidden hazards.
6. Never operate equipment that is not in perfect working order or without decals, guards, shields, or other protective devices in place.
7. Never disconnect or bypass any switch.
8. Carbon monoxide in the exhaust fumes can be fatal when inhaled, never operate a machine without proper ventilation.
9. Fuel is highly flammable, handle with care. Fuel is highly flammable, handle with care. When filling tank stop 1 inch(2.54 cm) from top. Leave room for expansion. **DO NOT OVERFILL.**
10. Keep engine clean. Allow the engine to cool before storing and always remove the ignition key.
11. Never use your hands to search for oil leaks. Hydraulic fluid under pressure can penetrate the skin and cause serious injury.
12. This machine demands your attention. To prevent loss of control or tipping of the vehicle:
    - A. Use extra caution in backing up the vehicle. Ensure area is clear.
    - B. Do not stop or start suddenly on any slope.
    - C. Reduce speed on slopes and in sharp turns. Use caution when changing directions on slopes.
    - D. Stay alert for holes in the terrain and other hidden hazards.
    - E. Run up and down slopes, never across the face.
13. Before leaving operator's position for any reason:
    - A Disengage all drives.
    - B. Lower all attachments to the ground.
    - C. Shut engine off and remove the ignition key.
14. Keep hands, feet and clothing away from moving parts. Wait for all movement to stop before you clean, adjust or service the machine.
15. The rubber fingers, sweeper and vacuum pick up and propel debris and small objects in its path during operation. Keep the area of operation clear of all bystanders.
16. Never carry passengers.
17. Stop engine before making repairs/adjustments or checking/adding oil to the crankcase.
18. Use parts and materials supplied by SMITHCO only. Do not modify any function or part.
19. Do not remove the radiator cap when the engine is hot. When cooled, loosen cap slightly to the stop to relieve any pressure before removing the cap completely.
20. Avoid sharp turns. Watch the tires of the tractor while turning to make sure they do not contact the tongue of the Turf Vac.
21. Shut down power source before attempting to unclog any part of the machine.
22. If reel deck begins to vibrate abnormally, immediately shut off power and determine the cause.
23. Do not tow on public roads.
24. Always drive at a safe towing speed relative to conditions and ensure that your speed is low enough for an emergency stop to be safe and secure. Smithco recommends a maximum speed of 8mph (12 kph).

SPECIFICATIONS FOR TURF VAC

WEIGHTS AND DIMENSIONS

Length	151" (384 cm)
Width	68" (172 cm)
Height	87" (221 cm)
Weight	1500 lb (680 kg)

SOUND LEVEL

At ear level	dBA

ENGINE

Make	Briggs &Stratton
Model#	386447
Type/Spec	0410-G1
Horsepower	23 Hp (17 kW)
Fuel	Unleaded 87 Octane Gasoline Minimum
Cooling System	Air Cooled
Lubrication System	Full Pressure
Alternator	20 Amp

TIRES & WHEELS

Two 24 x 13.00 x 12 NHS (18 psi (1.3 bar))

Castor: 9 x 3.5 x 4 (18 psi (1.3 bar))

BATTERY (optional)

Automotive type 45- 12 volt

BCI Group	Size 45
Cold Cranking Amps	480 minimum
Ground Terminal Polarity	Negative (-)
Maximum Length	9" (23 cm)
Maximum Width	5.38" (14 cm)
Maximum Height	9" (23 cm)

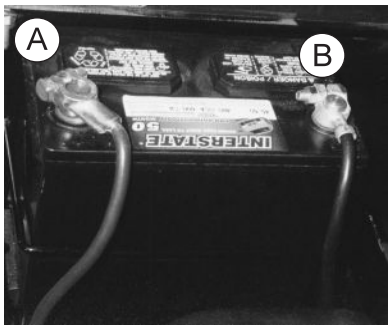

FLUID CAPACITY

Crankcase Oil	See Engine Manual
Fuel	6 gallon (22.7 liters)

SETUP

Turf Vac arrives from ***Smithco*** with some setup required.

1. Remove the top and sides from the shipping crate then remove the banding from the Sweeper.

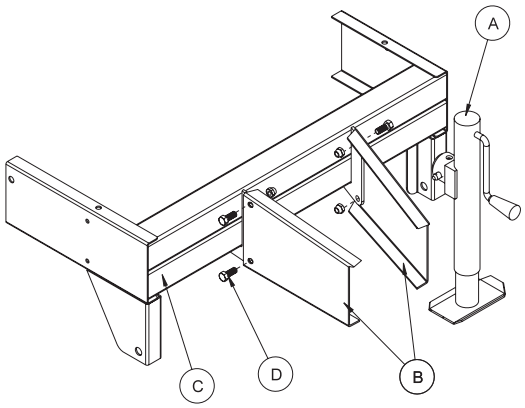

⚠ CAUTION **Banding is under tension.**

2. You will have to install the hitch onto your Turf Vac.
3. You will need a 22HP (minimum) tow vehicle with a 2600# minimum load capacity. You will need a $^{3}/_{4}$ diameter by 4" pin with some type of lock for the clevis hitch.
4. After the sweeper is hooked to the tow vehicle, you must raise the jack then turn it so that the foot of the jack is under the tongue of the sweeper.

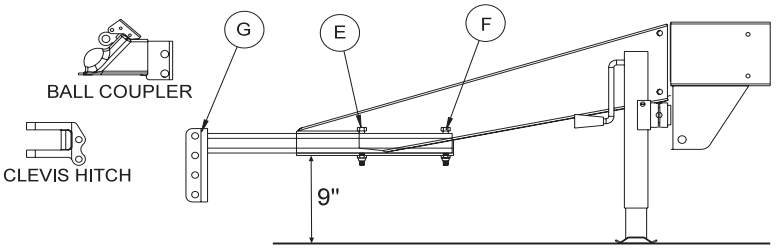

5. Install castor wheels onto the vacuum head assembly. You may put the machine bushings and spacers (A) on in any combination to get desired height. You should leave one machine bushing on the very bottom and one on the very top next to the lockpin.

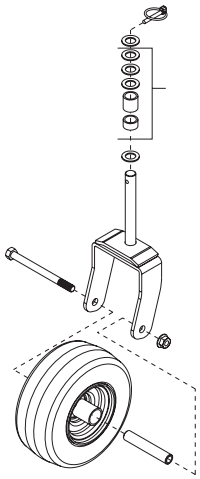

6. Check the tire pressure. ***Turf Vac:*** 18 psi (1.3 bar) ***Castor Wheels:*** 20 psi (1.4 bar).
7. Install the battery. Battery box is located behind the fuel tank. This is a negative grounding system.

⚠ WARNING **Connecting battery cables to the wrong post could result in personal injury and/or damage to the electrical system. Make sure battery and cables do not interfere or rub on any moving part. Connect the red positive(+) cable (A) to the battery first. When disconnecting remove the black negative(-) cable (B) first.**

7. Check the engine oil and add as necessary. The dip stick is located on the right side, to the back of the engine. Oil fill is located on top of valve cover, use SAE 10W-40 API Service SJ or higher motor oil. **DO NOT OVERFILL.**
8. Check coolant level. Coolant tank is located on the left side of the engine.
9. Fill fuel tank, located on right side, with Unleaded 87 Octane gasoline (minimum). When filling the fuel tank stop when the fuel reaches 1 inch (2.54cm) from the top. This space is necessary for fuel expansion. **DO NOT OVERFILL.**

⚠ DANGER **Fuel is flammable. Caution must be used when storing or handling it. Do not fill fuel tank while engine is running or in an enclosed area. Fumes are explosive and dangerous to inhale. DO NOT SMOKE while filling the fuel tank. DO NOT OVERFILL.**

10. Machine should be greased before starting. See Maintenance part of manual.
11. Read operating instructions before starting.

OPERATION

Before operating this machine, become familiar with all controls and functions of this unit and the tow vehicle. Also complete all maintenance requirements and read all safety warnings. By knowing both machines thoroughly, how it operates and by doing the prescribed maintenance steps, you can expect relatively trouble-free operation for years to come.

TOW VEHICLE

You will need a 22HP minimum tow vehicle, with a 2600 lb. minimum load capacity.

1. **Clevis Hitch -** You will need a $^{3}/_{4}$ diameter by 4" pin with some type of lock.
2. After the sweeper is hooked to the tow vehicle, you must raise the jack then turn it so that the foot of the jack is under the tongue of the sweeper.
3. Always drive at a safe towing speed relative to conditions and ensure that your speed is low enough for an emergency stop to be safe and secure. Smithco recommends a maximum speed of 8mph (12 kph).

DAILY CHECKLIST

1. Check engine oil level. Add as needed. DO NOT OVERFILL.
2. Tire pressure should be 18 psi (1.3 bar) on Turf Vac tires and 20 psi (1.4 bar) on castor wheels.
3. Inspect electrical system for loose connections or frayed wiring, including battery cables. Replace any faulty equipment or tighten if loose.
4. Check hardware for loose or missing nuts, bolts, screws, etc., and tighten or replace as needed.
5. Inspect hydraulic lines for damage or leaks. Never use hands to inspect leaks.
6. Check hydraulic oil level in right side tank. The level should be 2" to $2^{1}/_{2}$" (5-6.4 cm) from top of tank when fluid is cold. If level is low, add SAE 10W-40 API Service SJ or higher motor oil.
7. Check controls for smooth, proper working operation. Lubricate as needed.
8. Check and clean all debris from engine compartment.
9. Check coolant tank level. Fill as needed.

STARTING ENGINE

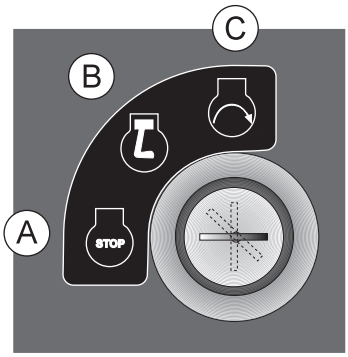

1. Make sure the fuel flow valve, located on the fuel tank, is “ON.”
2. The ignition switch is located on remote operator control panel. Insert key (A) and turn clockwise until engine starts (C). Release key and it will return to run position (B). Use choke and hand throttle as necessary.
3. Allow engine to idle and warm up a few minutes.
4. Be sure the jack is all the way up and will clear all ground obstacles.

ADJUSTMENT OF BELT TENSIONER

The belt tensioner controls the tension on the belt from the engine to blower shaft. The proper tension of the idler should be in the second notch on the side of the tensioner. Over tightening the belt will shorten the life of the belt and the machine may not perform to the best of its ability. To adjust belt tensioner, loosen the bolt holding the tensioner (A). Bring idler pulley tight to the belt and turn tensioner into belt to the second notch. Tighten bolt on tensioner.

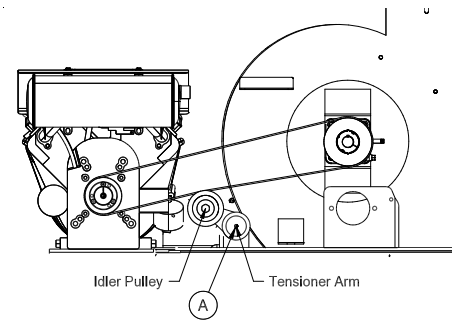

DECK LIFT ARMS

1. The deck lift arms (D) are located on the right and left sides of the main frame above the reel housing.
2. The up position (A) is used in transport.
3. The lower position (B) is used when reel is being used.
4. To lower the deck, grab deck lift handle (D) and lift up and away from the machine. Lower handle to the bottom of the slot (B).
5. To raise the deck, lift the deck lift handles (D) all the way up and push in towards machine to rest in notch (A).
6. The jack (C) must be put in the up position whenever the machine is in motion. Pull the lockpin (E) and rotate the jack towards the machine. Replace lockpin.

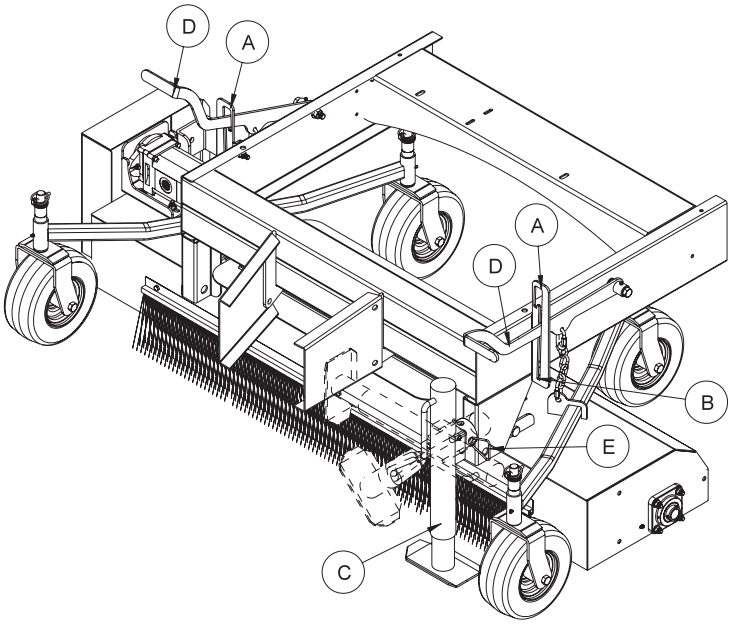

TAILGATE ADJUSTMENT

VAC TAILGATE LEVELING

If the tailgate is not sitting level against the hopper it can be leveled by loosening the $^{3}/_{8}$ inch bolts that hold the pivot bracket to the upper lift arms then rotate the pivot brackets until tailgate level then tighten. Once it is level it must be readjusted using steps 1, 2 and 3.

VAC TAILGATE ADJUSTMENT PROCEDURE

1. Open tailgate approximately 10 inches and shut off engine. Locate the $^{3}/_{8}$ inch bolts that connect the lower lift arm to the tailgate (Connected by springs). Loosen them about 1½ turns.

2. Find at top corners of the tailgate the $^{1}/_{2}$ inch bolt that connects the upper lift arms to the tailgate. Loosen both sides then push the tailgate in towards the hopper. The bolts will slide in the slots of the brackets on the end of the lift arms when pushed tight against the hopper. Tighten the outside nut just tight enough to hold it from moving in the slot, repeat on other side. (Do not over tighten).

3. Start the machine move the valve handle to the lower position and close the tailgate, as the tailgate comes in contact with the hopper it will push the top of the tailgate outward in the slots in the top lift arm as the bolts slide outward in the slots. As the bolts slide outward in the slots the tailgate will also glide downward approximately ½ inch. Check to see that the tailgate fits tight against the hopper. Then tighten the nuts together on both of the top corners of the tailgate using two ¾ inch wrenches. Then tighten the nuts on the $^{3}/_{8}$ inch bolts on the lower sides of the tailgate using two $^{9}/_{16}$ inch wrenches.

BATTERY

BATTERY

Batteries normally produce explosive gases which can cause personal injury. Do not allow flames, sparks or any ignited object to come near the battery. When charging or working near battery, always shield your eyes and always provide proper ventilation.

Battery cable should be disconnected before using “Fast Charge”.

Charge battery at 15 amps for 10 minutes or 7 amps for 30 minutes. Do not exceed the recommended charging rate. If electrolyte starts boiling over, decrease charging.

Always remove grounded (-) battery clamp first and replace it last. Avoid hazards by:

1. Filling batteries in well-ventilated areas.
2. Wear eye protection and rubber gloves.
3. Avoid breathing fumes when electrolyte is added.
4. Avoid spilling or dripping electrolyte.

⚠ WARNING

Battery Electrolyte is an acidic solution and should be handled with care. If electrolyte is splashed on any part of your body, flush all contact areas immediately with liberal amounts of water. Get medical attention immediately.

JUMP STARTING

⚠ WARNING

Use of booster battery and jumper cables. Particular care should be used when connecting a booster battery. Use proper polarity in order to prevent sparks.

To jump start (negative grounded battery):

1. Shield eyes.
2. Connect ends of one cable to positive (+) terminals of each battery, first (A) then (B).
3. Connect one end of other cable to negative (-) terminal of "good" battery (C).
4. Connect other end of cable (D) to engine block on unit being started (NOT to negative (-) terminal of battery)

To prevent damage to other electrical components on unit being started, make certain that engine is at idle speed before disconnecting jumper cables.

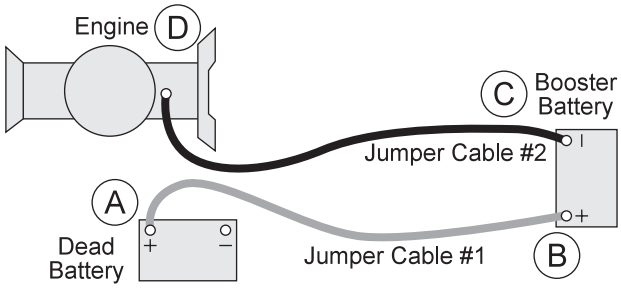

OVERLOADING DEBRIS HOPPER AND WEAR ON VACUUM HOUSING

MAXIMUM LOAD CAPACITY

There are decals on each side of the hopper to indicate the maximum depth of aeration cores. The maximum depth for aeration cores in the hopper is 40" (101 cm). The maximum depth of sand and dirt in hopper is 20" (50cm).

Overloading will cause damage that is not covered by the warranty.

OVERLOADING DEBRIS HOPPER

Smithco Sweeper-Vacs are designed to carry the following maximum loads:

78-500 Turf Vac 860 lbs. (400 kg)

PLEASE NOTE THE FOLLOWING:

1. Loads heavier than that will damage the unit.
2. Such damage is not covered by warranty.
3. Overloading is particularly easy when collecting aerifier cores.
4. The hoppers on the VAC is large in order to hold 4 cubic yards of thatch, grass clippings, leaves and trash.
5. They **will not** hold 4 cubic yards of aerifier cores.
6. The maximum depth (in the debris hopper) of aerifier cores is:

   78-500 Turf Vac 40 in. (101 cm)

VACUUM HOUSING WEAR

Smithco Vacs are fitted with a wear resistant liner in the vacuum housing. This will provide additional housing life. Be sure the following points are explained to the user:

1. The vacuum housing and impeller must be cleaned each time the unit is used so the housing liner is inspected daily. Only Smithco Vacs provide a clean out/inspection port for easy inspection and cleaning.
2. When bare steel is visible at any point in the housing lining, the lining must be replaced. It is expected the liner will wear and be replaced. It is a vast improvement over competitive units with no liners.
3. Replacement of the liner or the vacuum housing due to wear is normal and is not covered by warranty.
4. Collection of aerifier cores causes extreme wear on the liner (and if unchecked, on the housing).
5. Caution users that, while Smithco Vacs do an excellent job collecting cores, the lining (and the housing) will wear quickly in such use.

RUBBERIZED BOOT

The rubberized boot between main unit and sweeper head is subject to wear and damage from debris. Unless defective, replacement of this boot is not covered by warranty.

WIRING DRAWING

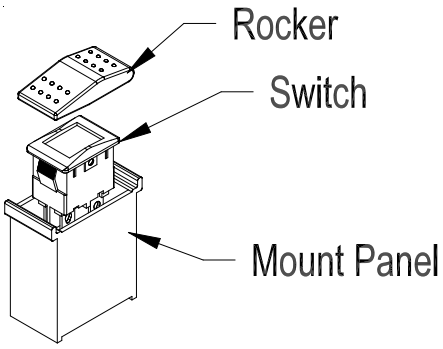

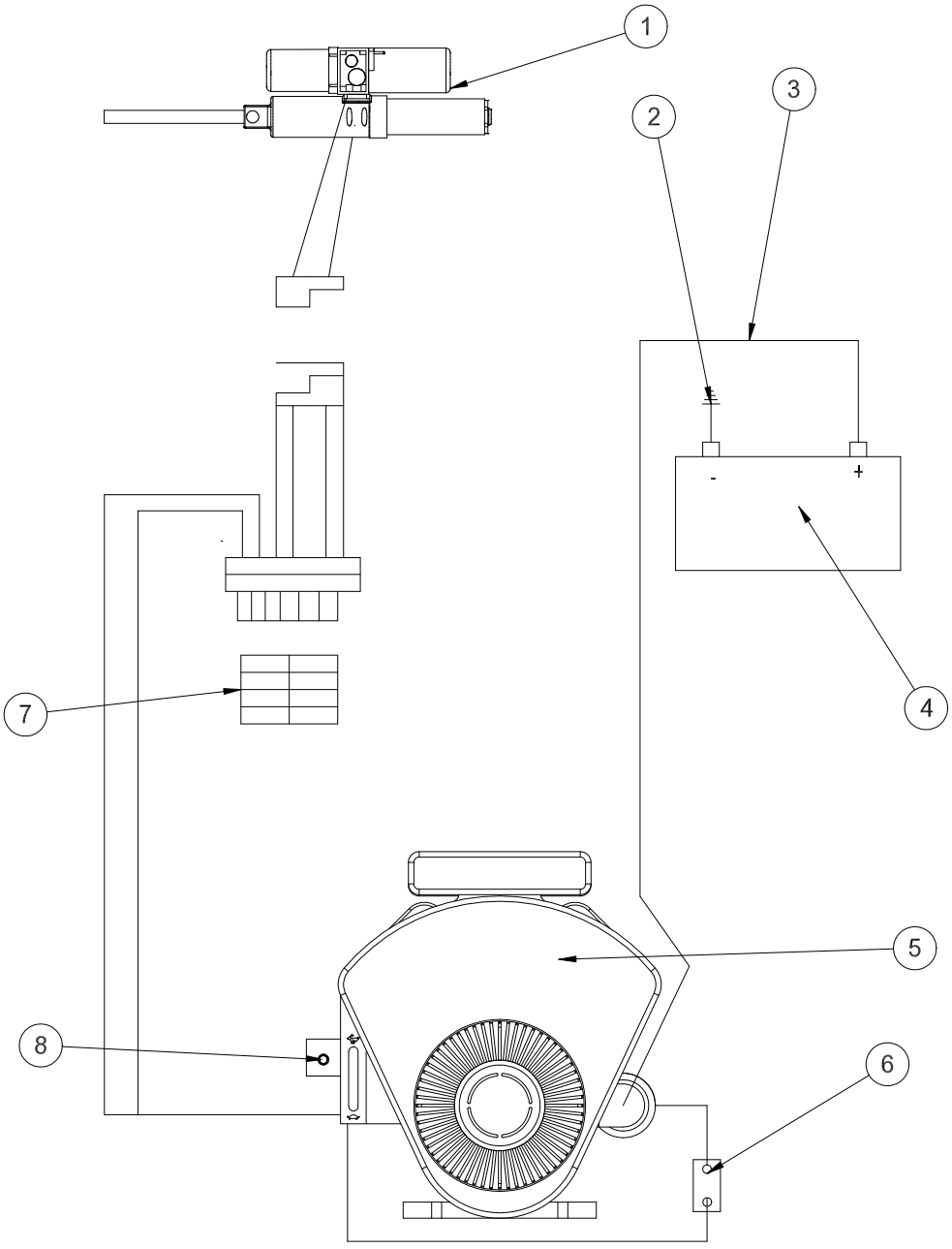

REF#	PART#	DESCRIPTION	QUANTITY
1	30-214	KYB Hyd/Elec Actuator	1
2	22-054	Battery Cable Black	1
3	78-325	Red Battery Cable with Boot	1
4	22-073	Battery (optional)	1
5	78-493	Briggs & Stratton 23HP Engine	1
	13-488	Key Switch	1
6	77-261	40AMP Breaker	1
	8977	Circuit Breaker Boot	1
7	15-727	Rocker	1
	15-728	Centering Switch, On-Off-On	1
8	50-359	Warning Light	1
	8963	Heat Shrink	2
	8853	Slide on Connector	1
	8858	Male Slide on Connector	1
	78-520	Wire Harness	1

Wire Harness (includes all wire colors with *)

EC Declaration of Incorporation

In accordance with EN ISO 17050-1:2004

We

Smithco Inc.
34 West Avenue
Wayne, PA USA
19087-3311

In accordance with the following Directive:

2006/42/EC — The Machinery Directive

hereby declare that for the partly completed machinery identified as :

Equipment	Sweep Star Vac
Model number	78-500
Serial Number	VAC101

the following EHSRs have been complied with:

ANSI/OPEI B71.4-2012	Comercial Turf Equip. Safety Specification
BS EN ISO 13857	Safety of Machinery upper and lower limbs
BS EN 349: 1993+A1:2008	Safety of Machinery Crushing hazards

and the technical documentation is compiled in accordance with Annex VII(B) of the Directive.

We undertake to transmit, in response to a reasoned request by the appropriate national authorities, relevant information on the partly completed machinery identified above. The method of transmission shall be electronically

The machinery is incomplete and must not be put into service until the machinery into which it is to be incorporated has been declared in conformity with the provisions of the Directive.

The technical documentation for the machinery is available from:

2006/42/EC Annex II 1A: 10
Dawn Bryngelson
Technical Documentation Advisor
Smithco West Inc.
200 West Poplar Avenue
Cameron, WI 54822 USA
15-Mar-18

2006/42/EC Annex II 1A: 2
John Moore
Sales Director/Owner
Moore Turf Care
Thieplatz 4
49583 Lienen Germany
23-Sep-19

Document ref. No. 785002019-1

The Smithco Commercial Products Two-Year Limited Warranty

Smithco, Inc. (Smithco) warrants your 2016 or newer Smithco Commercial Product ("Product") purchased after October 1, 2016 to be free from defects in materials or workmanship for the period of time listed below. Where a warrantable condition exists, Smithco will repair the Product at no cost to you including diagnosis, labor (at the Smithco standard labor rate, subject to the Smithco flat rate schedule), and parts.

Warranty Duration is:

(1) Two years, 1500 operational hours* from the date of delivery to the original purchaser or Five years from the date of original manufacturer of the product, whichever occurs first. (*Products equipped with hour meter).

(2) Products used in rental situations are covered for 90 days from date of delivery to original user/renter.

Owner Responsibilities:

As the Product owner, you are responsible for required maintenance and adjustments stated in your Owner's Manual. Failure to perform required maintenance and adjustments can be grounds for disallowing a warranty claim. **You are particularly responsible to train all present and future operators of this product on the safe operation of this product at your location.**

Instructions for Obtaining Warranty Service:

You are responsible for notifying the Authorized Smithco Products Distributor from whom you purchased the Product as soon as you believe a warrantable condition exists and not later than 30 days from discovery of the condition.

If you need help locating an Authorized Smithco Distributor, or if you have questions regarding your warranty rights or responsibilities, you may contact us at:

Smithco Product Support Department
200 West Poplar Ave.
Cameron, Wisconsin 54822
Telephone: 800-891-9435 E-Mail: ProductSupport@Smithco.com

Maintenance Parts:

Parts scheduled for replacement as required maintenance ("Maintenance Parts"), are warranted for the period of time up to the scheduled replacement time for that part.

Items/Conditions Not Covered:

Not all product failures or malfunctions that occur during the warranty period are defects in materials or workmanship. The items/conditions listed below are not covered by this warranty:

- Product failures which result from the use of non-Smithco replacement parts, or from installation and use of add-on, modified, or unapproved accessories are not covered.
- Product failures which result from failure to perform required maintenance and/or adjustments are not covered.
- Product failures that result from operating the Product in an abusive, negligent or reckless manner are noT covered.
- This warranty does not apply to parts subject to consumption through use, unless found to be defective. Examples of parts which are consumed, or used up, during normal Product operation include, but are not limited to: blades, tines, teeth, scarifiers, rakes, plates, wear plates, castor wheels, tires, batteries, filters, belts, nozzles, etc.

- This warranty does not apply to failures caused by outside influence. Items considered to be outside influence include, but are not limited to, weather, storage practices, contamination, use of unapproved coolants, lubricants, additives, or chemicals, etc.

- This warranty does not apply to normal “wear and tear” items. Normal “Wear and Tear” includes, but is not limited to, damage to seats due to wear or abrasion, worn painted surfaces, scratched decals or windows, etc.

- Smithco may require the return of failed parts or components in order to determine the validity of any warranty claim.

- Smithco will not be obligated to replace components of other manufacturers if inspection by the original component manufacturer indicates that failure was due to normal wear and tear, expected consumption through use or improper care or service.

Other Legal Disclaimers:

The above remedy for product defects through repair or replacement by an authorized Smithco distributor or dealer is the purchaser’s sole remedy for any defect. This warranty gives you specific legal rights, and you may also have other rights which vary from state to state.

THERE ARE NO OTHER EXPRESS WARRANTIES OTHER THAN THOSE SET FORTH ABOVE. ALL IMPLIED WARRANTIES OF MERCHANTABILITY AND FITNESS FOR USE ARE LIMITED TO THE DURATION OF THE LIMITED WARRANTIES CONTAINED HEREIN.

Some states may not allow limitations on how long an implied warranty lasts, so the above limitation may not apply to you.

THE SMITHCO COMPANY IS NOT LIABLE FOR INDIRECT, INCIDENTAL OR CONSEQUENTIAL DAMAGES IN CONNECTION WITH THE USE OF THE PRODUCT, INCLUDING ANY COST OR EXPENSE OF PROVIDING A SUBSTITUTE PRODUCT OR SERVICE DURING PERIODS OF MALFUNCTION OR NON-USE.

Some states may not allow the exclusion of indirect, incidental or consequential damages, so the above exclusion may not apply to you.

Smithco neither assumes, nor authorizes any person to assume for it, any other liability in connection with the sale or use of this product.

Smithco

Wayne, PA 19087 www.smithco.com