Parts & Service

Smithco

Wayne, PA 19087 www.smithco.com

V62-V Turf Vac
78-500
SN:VAC101

November 2017

Product Support: ***Hwy SS & Poplar Ave; Cameron WI 54822***
1-800-891-9435 productsupport@smithco.com

INTRODUCTION

Introduction 1-3
Safe Practices 2
Specifications 3
Service 4-11
Maintenance 4-6
Overloading Debris Hopper and Vacuum Housing Wear 7
Service Chart 8-9
Adjustments 10
Tailgate Adjustments 11
Storage 11
Diagrams 12-13
Wiring Diagram 12-13
Parts 14-31
Body and Frame 14-15
Engine and Guards 16-17
Tensioner Pulley 18-19
Blower Housing 20-21
Gas Tank 22-23
Vacuum Head 24-25
Hopper 26-27
Tailgate 28-29
Rear Axle 30-31
Accessories 32
78-208 Filter System 32
Reference 33-34
Decal List 33
Quick Reference Replacement Parts 34
Warranty ..... Inside Back Cover

INTRODUCTION

Thank you for purchasing a ***Smithco*** product.

Read this manual and all other manuals pertaining to the Turf Vac carefully as they contain safety, operating, assembly and maintenance instructions. Failure to do so could result in personal injury or equipment damage.

Keep manuals in a safe place after operator and maintenance personnel have read them. Right and left sides are from the operator's seat, facing forward.

WARNING:

Engine exhaust and some of its constituents are known to the State of California to cause cancer, birth defects, and other reproductive harm.
For more information visit
www.P65Warning.ca.gov

WARNING

Failure to follow cautious operating practices can result in serious injury to the operator or other persons. The owner must understand these instructions, and must allow only trained persons who understand these instructions to operate this vehicle.

All ***Smithco*** machines have a Serial Number and Model Number. Both numbers are needed when ordering parts. Refer to engine manual for placement of engine serial number.

For product and accessory information, help finding a dealer, or to register your product please contact us at www.Smithco.com.

Information needed when ordering replacement parts:

1. Model Number of machine
2. Serial Number of machine
3. Name and Part Number of part
4. Quantity of parts

For easy access record your Serial and Model numbers here.

SMITHCO
WAYNE, PENNSYLVANIA 19087 USA
610-688-4009 Fax 610-688-6069

CE

SERIAL NO.	kW/hp	DATE OF MFG.
MODEL NO.	**lb/kg Empty**	**lb/kg Full**

SMITHCO CUSTOMER SERVICE 1-800-891-9435

SAFE PRACTICES

1. It is your responsibility to read this manual and all publications associated with this machine (engine, accessories and attachments).
2. Never allow anyone to operate or service the machine or its attachments without proper training and instructions. Never allow minors to operate any equipment.
3. Learn the proper use of the machine, the location and purpose of all the controls and gauges before you operate the equipment. Working with unfamiliar equipment can lead to accidents.
4. Wear all the necessary protective clothing and personal safety devises to protect your head, eyes, ears, hands and feet. Operate the machine only in daylight or in good artificial light.
5. Inspect the area where the equipment will be used. Beware of overhead obstructions and underground obstacles. Stay alert for hidden hazards.
6. Never operate equipment that is not in perfect working order or without decals, guards, shields, or other protective devices in place.
7. Never disconnect or bypass any switch.
8. Carbon monoxide in the exhaust fumes can be fatal when inhaled, never operate a machine without proper ventilation.
9. Fuel is highly flammable, handle with care.
10. Keep engine clean. Allow the engine to cool before storing and always remove the ignition key.
11. Never use your hands to search for oil leaks. Hydraulic fluid under pressure can penetrate the skin and cause serious injury.
12. This machine demands your attention. To prevent loss of control or tipping of the vehicle:
    - A. Use extra caution in backing up the vehicle. Ensure area is clear.
    - B. Do not stop or start suddenly on any slope.
    - C. Reduce speed on slopes and in sharp turns. Use caution when changing directions on slopes.
    - D. Stay alert for holes in the terrain and other hidden hazards.
    - E. Run up and down slopes, never across the face.
13. Before leaving operator's position for any reason:
    - A Disengage all drives.
    - B. Lower all attachments to the ground.
    - C. Shut engine off and remove the ignition key.
14. Keep hands, feet and clothing away from moving parts. Wait for all movement to stop before you clean, adjust or service the machine.
15. The rubber fingers, sweeper and vacuum pick up and propel debris and small objects in its path during operation. Keep the area of operation clear of all bystanders.
16. Never carry passengers.
17. Stop engine before making repairs/adjustments or checking/adding oil to the crankcase.
18. Use parts and materials supplied by SMITHCO only. Do not modify any function or part.
19. Do not remove the radiator cap when the engine is hot. When cooled, loosen cap slightly to the stop to relieve any pressure before removing the cap completely.
20. Avoid sharp turns. Watch the tires of the tractor while turning to make sure they do not contact the tongue of the Turf Vac.
21. Shut down power source before attempting to unclog any part of the machine.
22. If reel deck begins to vibrate abnormally, immediately shut off power and determine the cause.
23. Do not tow on public roads.
24. Always drive at a safe towing speed relative to conditions and ensure that your speed is low enough for an emergency stop to be safe and secure. Smithco recommends a maximum speed of 8mph (12 kph).

SPECIFICATIONS FOR TURF VAC

WEIGHTS AND DIMENSIONS

Length	151" (384 cm)
Width	68" (172 cm)
Height	87" (221 cm)
Weight	1500 lb (680 kg)

SOUND LEVEL

At ear level	dBA

ENGINE

Make	Briggs &Stratton
Model#	386447
Type/Spec	0410-G1
Horsepower	23 Hp (17 kW)
Fuel	Unleaded 87 Octane Gasoline Minimum
Cooling System	Air Cooled
Lubrication System	Full Pressure
Alternator	20 Amp

TIRES & WHEELS

Two 24 x 13.00 x 12 NHS (18 psi (1.3 bar))

Castor: 9 x 3.5 x 4 (18 psi (1.3 bar))

BATTERY (optional)

Automotive type 45- 12 volt

BCI Group	Size 45
Cold Cranking Amps	480 minimum
Ground Terminal Polarity	Negative (-)
Maximum Length	9" (23 cm)
Maximum Width	5.38" (14 cm)
Maximum Height	9" (23 cm)

FLUID CAPACITY

Crankcase Oil	See Engine Manual
Fuel	6 gallon (22.7 liters)

These machines are intended for professional maintenance on golf courses, sports turf, and any other area maintained turf and related trails, paths and lots. No guaranty as to the suitability for any task is expressed or implied.

MAINTENANCE

⚠ CAUTION **Before servicing or making adjustments to machine, stop engine and remove key from ignition.**

⚠ IMPORTANT **Use all procedures and parts prescribed by the manufacturer's. Read the engine manual before operation.**

LUBRICATION

Use No. 2 General Purpose Lithium Base Grease and lubricate daily. The Turf Vac has fifteen grease fittings. All bearings are sealed bearings. When inserting grease, be careful not to ruin the seal, if this happens, replace the bearing at once.

Be sure to wipe grease fitting clean before injecting grease. Give only one or two pumps of grease at each lubrication.

REF#	LOCATION
1	One on all four castor wheels.
2	One on right and left hopper door arms.
3	One on right and left deck lift arm.
5	One on all four castor wheel mount brackets.
6	One on the jack stand.
7	Mounted bearings are greased via the grease anchors on the side of the hopper chute.

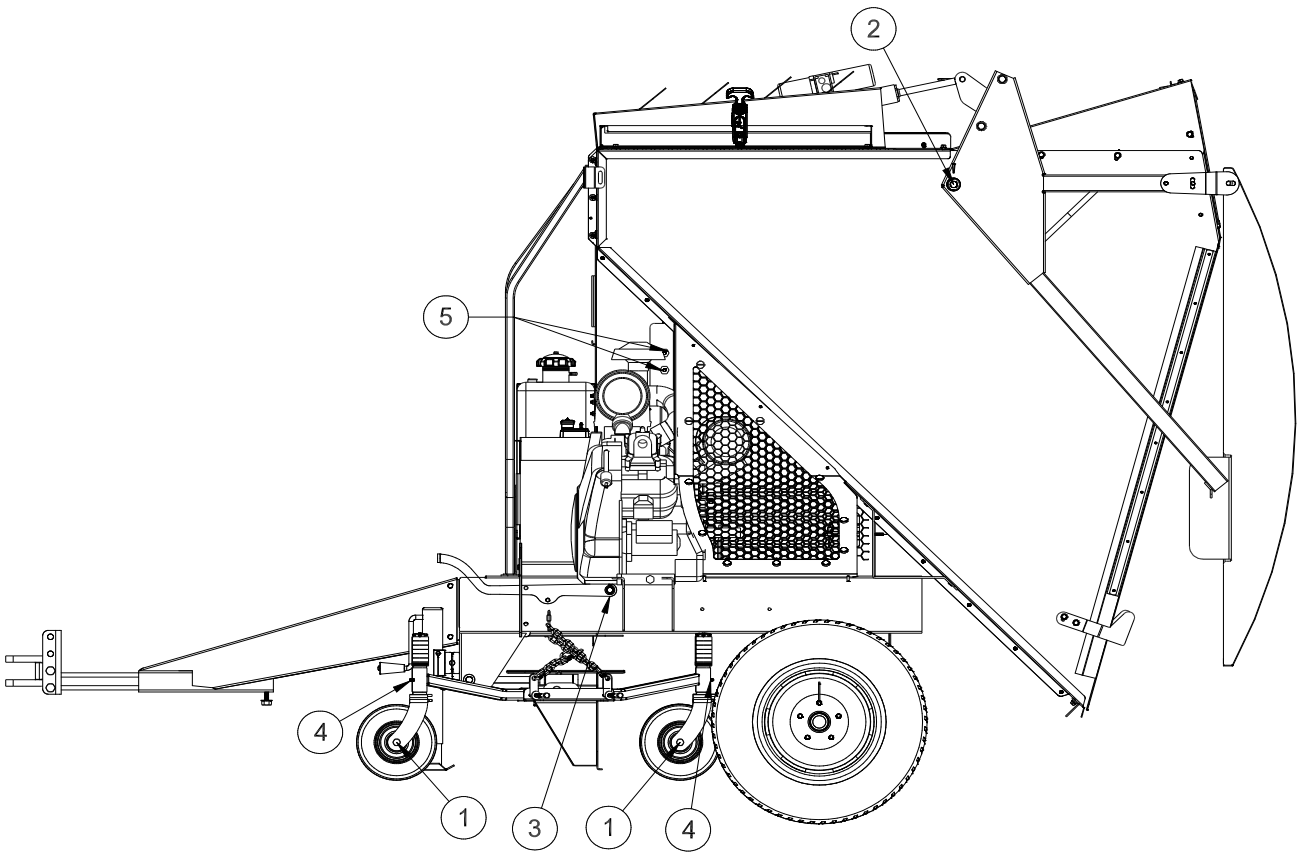

TIRE PRESSURE

Caution must be used when inflating a low tire to recommended pressure. Over inflating can cause tires to explode. Tires on the machine should be 18 psi (1.3 bar), castor wheels should be 18 psi (1.3 bar). Improper inflation will reduce tire life considerably.

ENGINE OIL

Change and add oil according to charts above. Do not overfill. Use a high quality detergent oil. Classified " Fro Service SF, SG, SH, SJ or higher." Use no special additives. Choose a viscosity according to the table above.

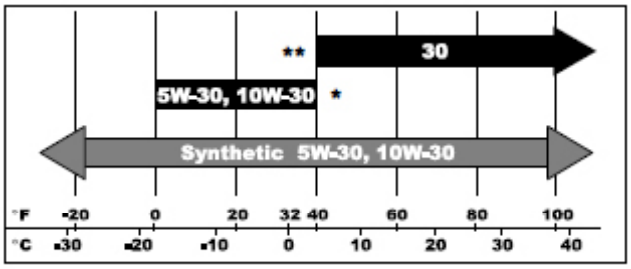

WHEEL MOUNTING PROCEDURE

MACHINE WHEELS

1. Turn machine off and remove key.
2. Be sure unit is on a level surface. Unhitch from tow vehicle if possible.
3. Block the opposite wheel then the one you are working on.
4. Loosen nuts slightly on wheel to be removed.
5. Jack up machine being careful not to damage underside of machine.
6. Remove nuts, remove wheel.
7. Place new wheel on hub lining up Hex Bolt holes.
8. Torque nuts to 64-74 ft/lb (87-100 Nm) using a cross pattern. Torque again after first 8 hours and every 200 hours thereafter.
9. Lower machine to ground and remove blocks and jack.

FILTER SYSTEM

Filter pack may be cleaned by shaking or spraying off with low pressure water. Filter will disintegrate if high pressure is used on it.

BATTERY

Batteries normally produce explosive gases which can cause personal injury. Do not allow flames, sparks or any ignited object to come near the battery. When charging or working near battery, always shield your eyes and always provide proper ventilation.

Battery cable should be disconnected before using “Fast Charge”.

Charge battery at 15 amps for 10 minutes or 7 amps for 30 minutes. Do not exceed the recommended charging rate. If electrolyte starts boiling over, decrease charging.

Always remove grounded (-) battery clamp first and replace it last. Avoid hazards by:

1. Filling batteries in well-ventilated areas.
2. Wear eye protection and rubber gloves.
3. Avoid breathing fumes when electrolyte is added.
4. Avoid spilling or dripping electrolyte.

⚠ WARNING

Battery Electrolyte is an acidic solution and should be handled with care. If electrolyte is splashed on any part of your body, flush all contact areas immediately with liberal amounts of water. Get medical attention immediately.

JUMP STARTING

⚠ WARNING

Use of booster battery and jumper cables. Particular care should be used when connecting a booster battery. Use proper polarity in order to prevent sparks.

To jump start (negative grounded battery):

1. Shield eyes.
2. Connect ends of one cable to positive (+) terminals of each battery, first (A) then (B).
3. Connect one end of other cable to negative (-) terminal of "good" battery (C).
4. Connect other end of cable (D) to engine block on unit being started (NOT to negative (-) terminal of battery)

To prevent damage to other electrical components on unit being started, make certain that engine is at idle speed before disconnecting jumper cables.

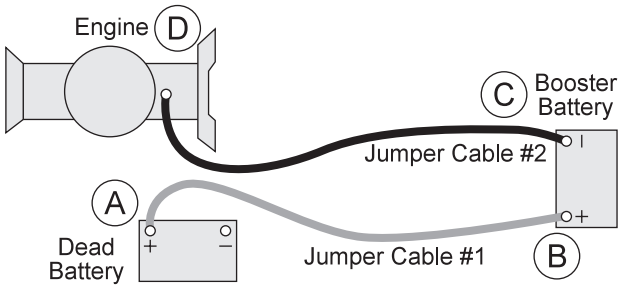

OVERLOADING DEBRIS HOPPER AND WEAR ON VACUUM HOUSING

MAXIMUM LOAD CAPACITY

There are decals on each side of the hopper to indicate the maximum depth of aeration cores. The maximum depth for aeration cores in the hopper is 40" (101 cm). The maximum depth of sand and dirt in hopper is 20" (50cm).

Overloading will cause damage that is not covered by the warranty.

OVERLOADING DEBRIS HOPPER

Smithco Vacs are designed to carry the following maximum loads:

78-500 Turf Vac	860 lbs. (400 kg)

PLEASE NOTE THE FOLLOWING:

1. Loads heavier than that will damage the unit.
2. Such damage is not covered by warranty.
3. Overloading is particularly easy when collecting aerifier cores.
4. The hopper on the VAC is large in order to hold 4 cubic yards of thatch, grass clippings, leaves and trash.
5. They **will not** hold 4 cubic yards of aerifier cores.
6. The maximum depth (in the debris hopper) of aerifier cores is:

78-500 Turf Vac	40 in. (101 cm)

VACUUM HOUSING WEAR

Smithco Vacs are fitted with a wear resistant liner in the vacuum housing. This will provide additional housing life. Be sure the following points are explained to the user:

1. The vacuum housing and impeller must be cleaned each time the unit is used so the housing liner is inspected daily. Only Smithco Vacs provide a clean out/inspection port for easy inspection and cleaning.
2. When bare steel is visible at any point in the housing lining, the lining must be replaced. It is expected the liner will wear and be replaced. It is a vast improvement over competitive units with no liners.
3. Replacement of the liner or the vacuum housing due to wear is normal and is not covered by warranty.
4. Collection of aerifier cores causes extreme wear on the liner (and if unchecked, on the housing).
5. Caution users that, while Smithco Vacs do an excellent job collecting cores, the lining (and the housing) will wear quickly in such use.

RUBBERIZED BOOT

The rubberized boot between main unit and sweeper head is subject to wear and damage from debris. Unless defective, replacement of this boot is not covered by warranty.

SERVICE CHART

⚠ CAUTION **Before servicing or making adjustments to the machine, stop engine, set park break, block wheels and remove key from ignition.**

⚠ IMPORTANT **Follow all procedures and ONLY use parts prescribed by the manufacturer. Read the engine manual before maintenance.**

The suggested maintenance checklist is not offered as a replacement for the manufacturer's engine manual but as a supplement. You must adhere to the guidelines established by the manufacturer for warranty coverage. In adverse conditions such as dirt, mud or extreme temperatures, maintenance should be more frequent.

Maintenance Service Interval	Maintenance Procedure
After the first 5 operating hours	Torque the wheel lug nuts. (64-74 ft/lb (87-100 Nm))
	Change the engine oil filter.
Before each use daily	Check the engine oil level.
	Clean area around muffler and controls.
	Check the tire pressure.
	Inspect and clean the machine.
Every 50 hours	Clean or change air filter.1&2
	Clean pre-cleaner.1
	Change engine oil and filter.
Every 100 hours	Replace spark plug.
	Lubricate machine.
	Clean or change remote air cleaner.
	Check the battery fluid level and cable connections..
	Change engine oil and filter
	Check belt tension .
Every 250 hours	Check Idle Speed.
	Clean battery terminals.
	Torque the wheel lug nuts. (64-74 ft/lb (87-100 Nm))
Every 400 hours or yearly	Change fuel filter.
	Clean oil cooler fins.1
	Replace air filter2
	Replace fuel filter
	Clean air cooling system.1
	Check safety filter in remote air cleaner.
1 In dusty conditions or when airborne debris is present, clean more often.	
2 Every third air filter change, replace the inner safety filter.	

DUPLICATE THIS PAGE FOR ROUTINE USE

Maintenance Check Item	For the week of:						
	Mon	Tues.	Wed.	Thurs.	Fri.	Sat.	Sun.
Check the fuel level							
Check the engine oil level.							
Check the condition of the air filter							
Clean the engine cooling fins.							
Check for unusual engine noises							
Check the tire pressure (18 psi)							
Check the Instrumentation							
Inspect electrical system for frayed wires							
Change oil filter.							
Change oil.							
Lubricate Machine and Booms							
Ensure all warning decals are intact.							
Areas of Concern							
Inspection Performed by:							

Item	Date	Information

ADJUSTMENTS

ADJUSTMENT OF BELT TENSIONER

The belt tensioner controls the tension on the belt from the engine to blc idler should be in the second notch on the side of the tensioner. Over tig the belt and the machine may not perform to the best of its ability. To adj holding the tensioner (A). Bring idler pulley tight to the belt and turn tens Tighten Hex Bolt on tensioner.

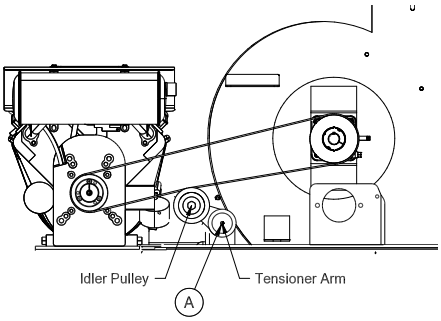

CASTOR WHEELS

Install castor wheels onto the brush/finger head assembly. You may put the machine bushings and spacers (A) on in any combination to get desired height. You should leave one machine bushing on the very bottom and one on the very top next to the lock pin. Check the tire pressure on Castor Wheels they should be 20 psi (1.4 bar).

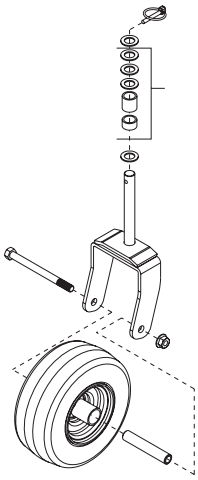

DRAIN

The drain is used to flush out any water or debris that accumulates in the bottom of the blower housing.

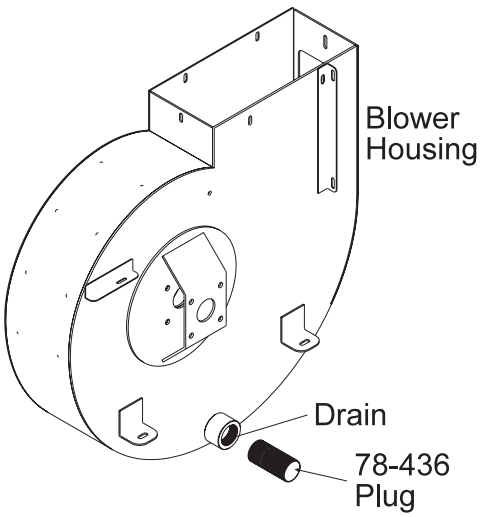

TAILGATE ADJUSTMENT

VAC TAILGATE LEVELING

If the tailgate is not sitting level against the hopper it can be leveled by loosening the 3/8 inch Hex Bolts that hold the pivot bracket to the upper lift arms then rotate the pivot brackets until tailgate level then tighten. Once it is level it must be readjusted using steps 1, 2 and 3.

VAC TAILGATE ADJUSTMENT PROCEDURE

1. Open tailgate approximately 10 inches and shut off engine. Locate the 3/8 inch Hex Bolts that connect the lower lift arm to the tailgate (Connected by springs). Loosen them about 1½ turns.

2. Find at top corners of the tailgate the 1/2 inch Hex Bolt that connects the upper lift arms to the tailgate. Loosen both sides then push the tailgate in towards the hopper. The Hex Bolts will slide in the slots of the brackets on the end of the lift arms when pushed tight against the hopper. Tighten the outside nut just tight enough to hold it from moving in the slot, repeat on other side. (Do not over tighten).

3. Start the machine move the valve handle to the lower position and close the tailgate, as the tailgate comes in contact with the hopper it will push the top of the tailgate outward in the slots in the top lift arm as the Hex Bolts slide outward in the slots. As the Hex Bolts slide outward in the slots the tailgate will also glide downward approximately ½ inch. Check to see that the tailgate fits tight against the hopper. Then tighten the nuts together on both of the top corners of the tailgate using two ¾ inch wrenches. Then tighten the nuts on the 3/8 inch Hex Bolts on the lower sides of the tailgate using two 9/16 inch wrenches.

STORAGE

When storing, remove the key from the key switch to avoid unauthorized persons from operating machine.

1. Before storing clean machine thoroughly.
2. Check Hex Bolts and nuts, tighten as necessary.
3. Make all repairs that are needed and remove any debris.
4. Remove the battery, adjust the electrolyte level and recharge it. Store the battery in a dry, dark place.
5. Store in a clean and dry area, but NOT near a stove, furnace or water heater which uses a pilot light or any device that can create a spark.
6. Engines stored over 30 days need to be protected or drained of fuel to prevent gum from forming in a fuel system or on essential carburetor parts. Check the engine manual and follow the instructions for the storage of the engine.

WIRING DRAWING

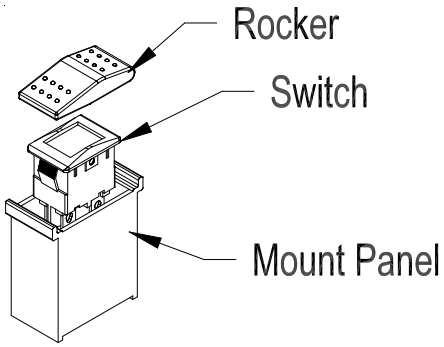

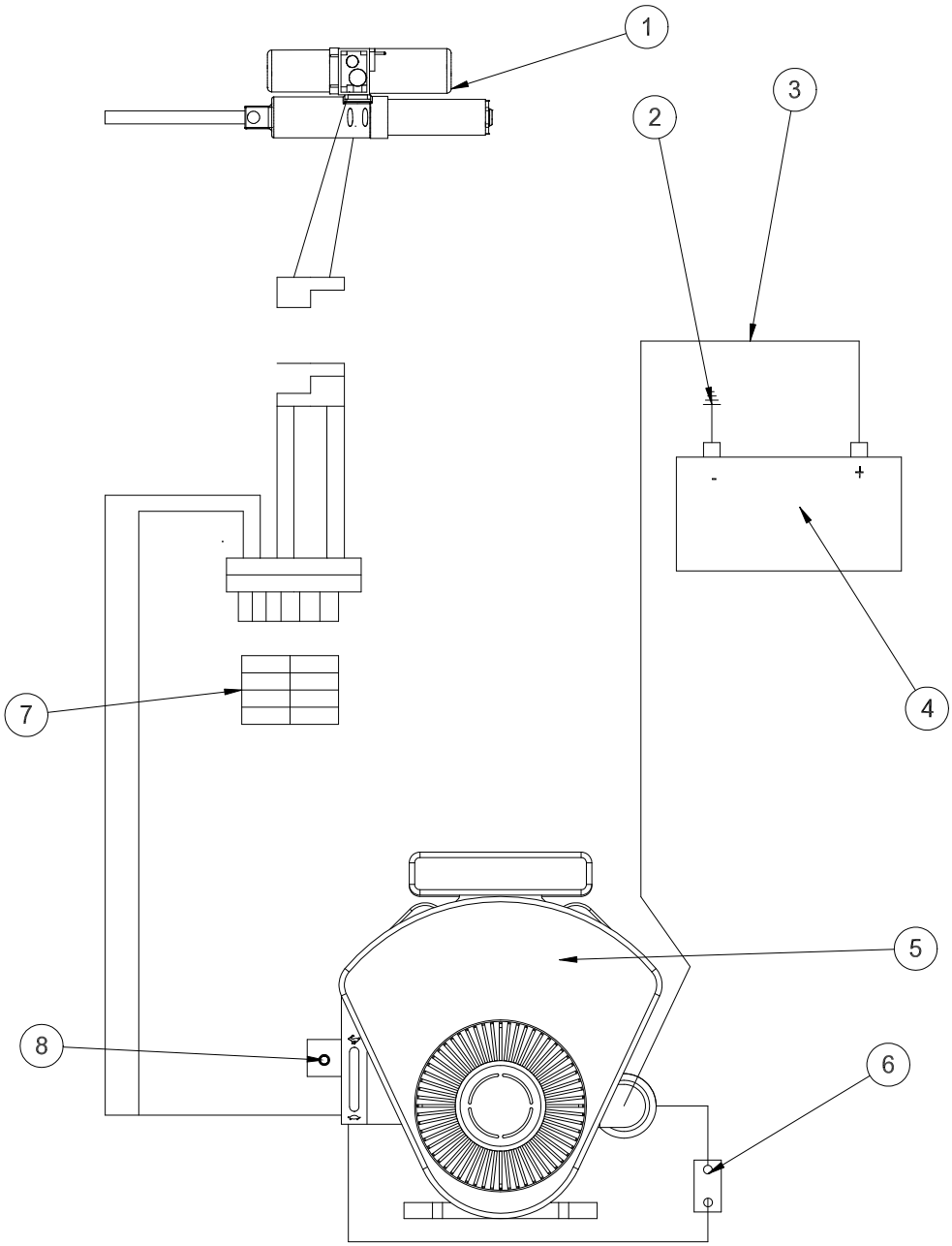

WIRING PARTS LIST

REF#	PART#	DESCRIPTION	QUANTITY
1	30-214	KYB Hyd/Elec Actuator	1
2	22-054	Battery Cable Black	1
3	78-325	Red Battery Cable with Boot	1
4	22-073	Battery (optional)	1
5	78-493	Briggs & Stratton 23HP Engine	1
	13-488	Key Switch	1
6	77-261	40AMP Breaker	1
	8977	Circuit Breaker Boot	1
7	15-727	Rocker	1
	15-728	Centering Switch, On-Off-On	1
8	50-359	Warning Light	1
	8963	Heat Shrink	2
	8853	Slide on Connector	1
	8858	Male Slide on Connector	1
	78-520	Wire Harness	1

Wire Harness (includes all wire colors with *)

BODY AND FRAME DRAWING

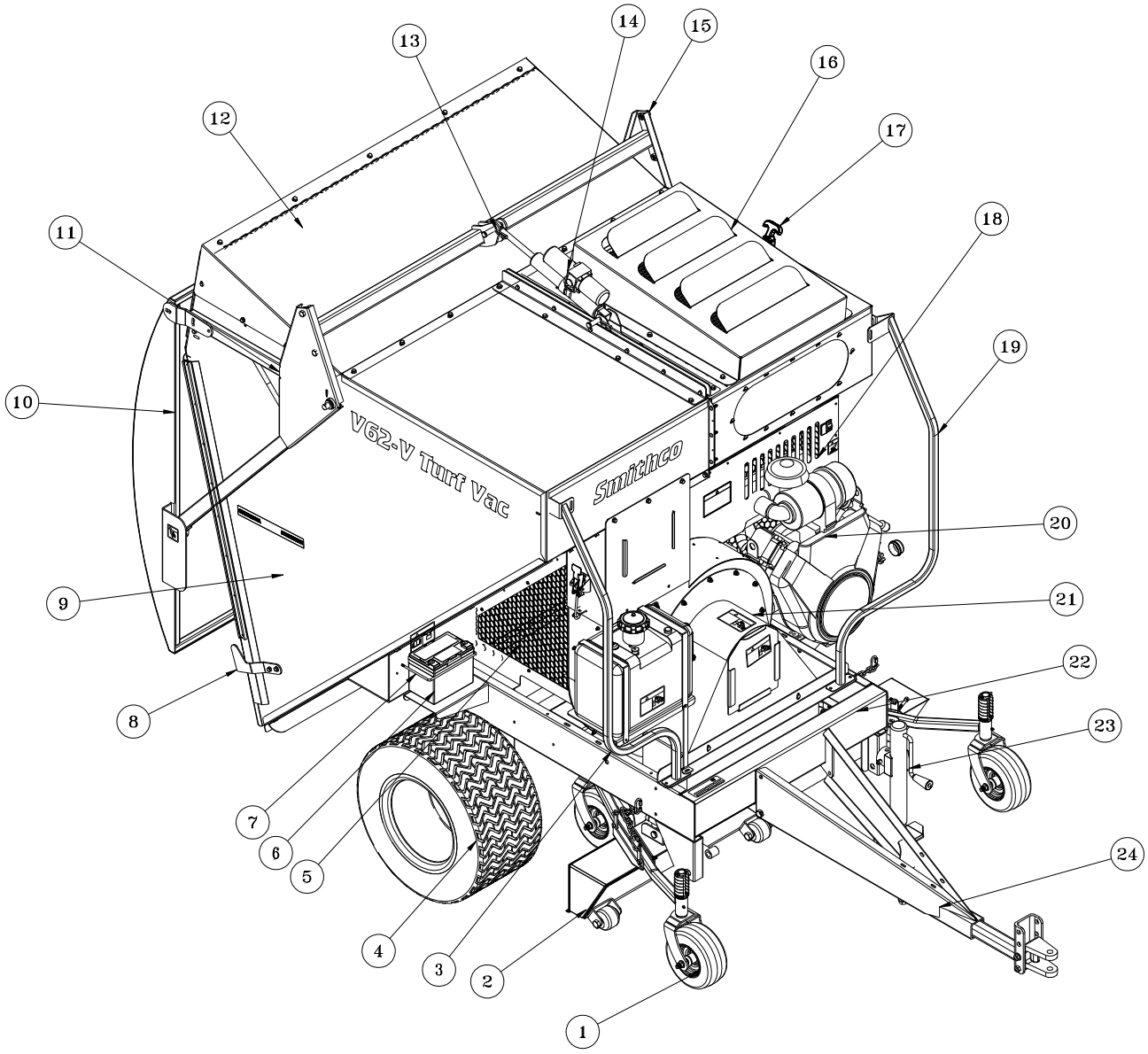

Cyclonic air cleaner
42-834

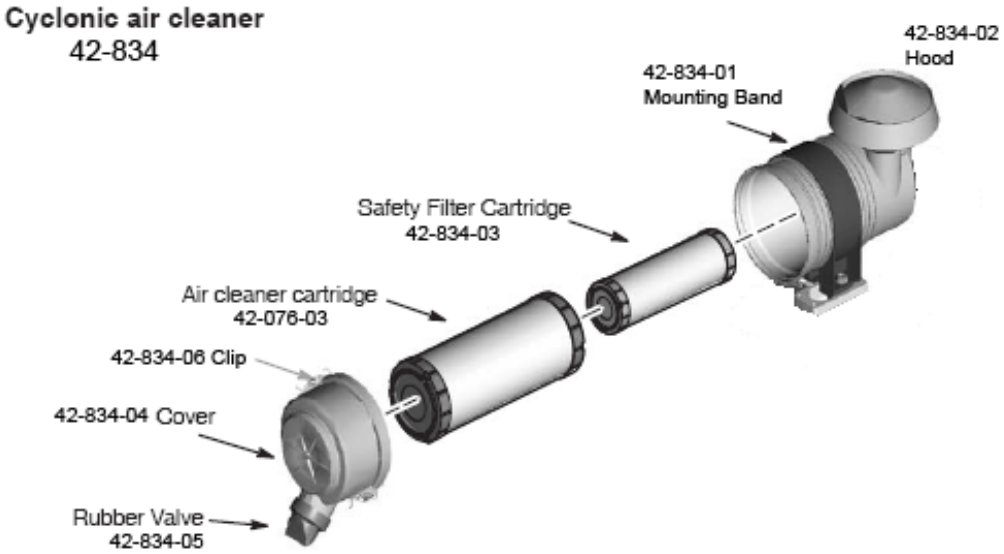

Parts

REF#	PART#	DESCRIPTION	QUANTITY
1	42-202	Castor Wheel	4
	42-202-01	Tire, 9 x 3.5 x 4	4
	42-202-02	Wheel	4
2	78-491	Vacuum Head	1
3	78-269	Right Brush Guard	1
	HB-516-18-075	Hex Bolt, 5/16 -18 x 3/4	4
	HNTL-516-18	Nylon Lock Nut, 5/16 - 18	4
4	78-221	Tire and Wheel	2
	78-221-01	Tire, 24 x 13 -12 6 Ply	2
	78-221-02	Wheel	2
5	78-253	Right Side Guard	1
	HSTP-14-20-075	Phillips Truss Head Machine Screw, 1/4 - 20 x 3/4	8
6	22-073	Battery (not included)	1
7	78-304	Battery Hold Down	1
	HWL-14	Lock Washer, 1/4	2
	HN-14-20	Hex Nut, 1/4 - 20	2
8	78-389	Right Hopper Door Latch	1
	78-388	Left Hopper Door Latch	1
9	78-260	Right Hopper	1
10	78-266	Hopper Door	1
11	78-319	Hopper Door Adjustment	2
12	78-272	Hopper Cover	1
13	78-495	Cross Bar	1
14	30-214	Actuator	1
	HCP-58-175	Clevis Pin, 5/8 x 1 3/4	2
	HHP-.177	Bridge Pin	2
15	78-264	Left Door Arm	1
16	78-395	Filter Hood	1
17	78-384	Flex Draw Latch	1
18	78-498	Guard Panel	1
19	78-444	Left Brush Guard	1
	HB-516-18-075	Hex Bolt, 5/16 -18 x 3/4	4
	HNTL-516-18	Nylon Lock Nut, 5/16 - 18	4
20	78-493	Engine Briggs & Stratton 23HP	1
21	78-257	Vacuum Housing	1
22	78-449	Main Frame	1
23	78-240	Jack	1
24	78-267	Tongue	1

ENGINE AND GUARDS DRAWING

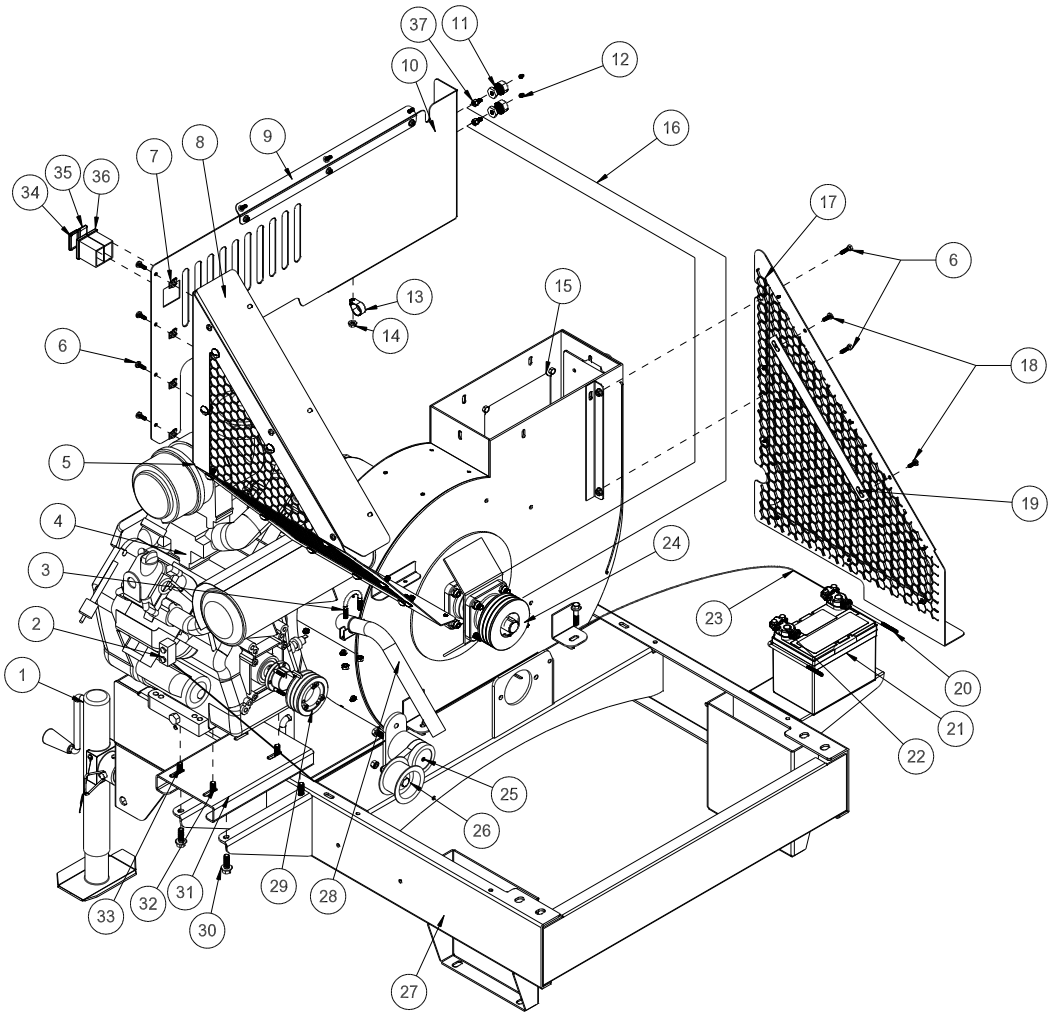

REF#	PART#	DESCRIPTION	QUANTITY
1	78-240	Jack	1
2	77-261	40Amp Circuit Breaker	1
	8977	Circuit Breaker Boot	1
3	18-220	Muffler Clamp	1
4	78-493	Briggs & Stratton 23HP Engine	1
	HB-516-18-125	Hex Bolt, 5/16 - 18 x 1 1/4	4
	HW-516	Flat Washer, 5/16	4
	HNTL-516-18	Nylon Lock Nut, 5/16 -18	4
5	78-339	Left Side Guard	1
	HSD-8-50	Drill Screw, #8 x 1/2	3
6	HSTP-14-20-075	Pan Head Screw, 1/4 - 20 x 3/4	4
7	78-274	Cage Nuts	4
8	78-448	Left Guard Upper Mount	1
9	78-317	Front Guard Mount	1
10	78-498	Guard Panel	1
11	18-339	Anchor Coupling	2
12	HG-14-28-180	Grease Fitting, 1/4 - 28 x 180°	2
13	HLC-100	Loom Clamp	1
14	HB-516-18-075	Hex Bolt, 5/16 - 18 x 3/4	1
	HW-516	Flat Washer, 5/16	1
	HNFL-516-18	Nylon Lock Nut, 5/16 - 18	1
15	78-375	Blower Housing	1
16	78-324	3/16" Brake line	2
17	78-253	Right Side Guard	1
18	HSD-8-50	Drill Screw, # 8 x 1/2	2
19	78-315	Right Guard Mount	1
20	78-304	Battery Hold Down	1
	HWL-14	Lock Washer, 1/4	2
	HN-14-20	Hex Nut, 1/4 - 20	2
21	22-073	Battery (optional)	1
22	22-054	Battery Cable Black	1
23	78-325	Battery Cable Red	1
24	78-233	Pulley	1
25	42-327	Belt Tensioner	1
26	16-013	Idler Pulley	1
	42-338	Oilite Bushing	1
27	78-449	Main Frame	1
28	78-492	Tail Pipe	1
29	78-424	Pulley	1
37	78-429	Hub, 1"	1
30	HBFL-516-18-075	Flange Whiz-loc Bolt, 5/16 - 18 x 3/4	4
	HNFL-516-18	Nylon Lock Nut, 5/16 - 18	4
31	78-499	Engine Spacer	1
32	HB-516-18-175	Hex Bolt, 5/16 - 18 x 1 3/4	2
	HW-516	Flat Washer, 5/16	2
33	HB-516-18-150	Hex Bolt, 5/16 - 18 x 1 1/2	2
	HW-516	Flat Washer, 5/16	2
34	15-730	Mount Panel Plug	1
35	15-727	Rocker	1
	15-728	Centering Switch, On-Off-On	1
36	15-725	Mount Panel End	2
37	18-338	Male Connector	2

TENSIONER PULLEY DRAWING

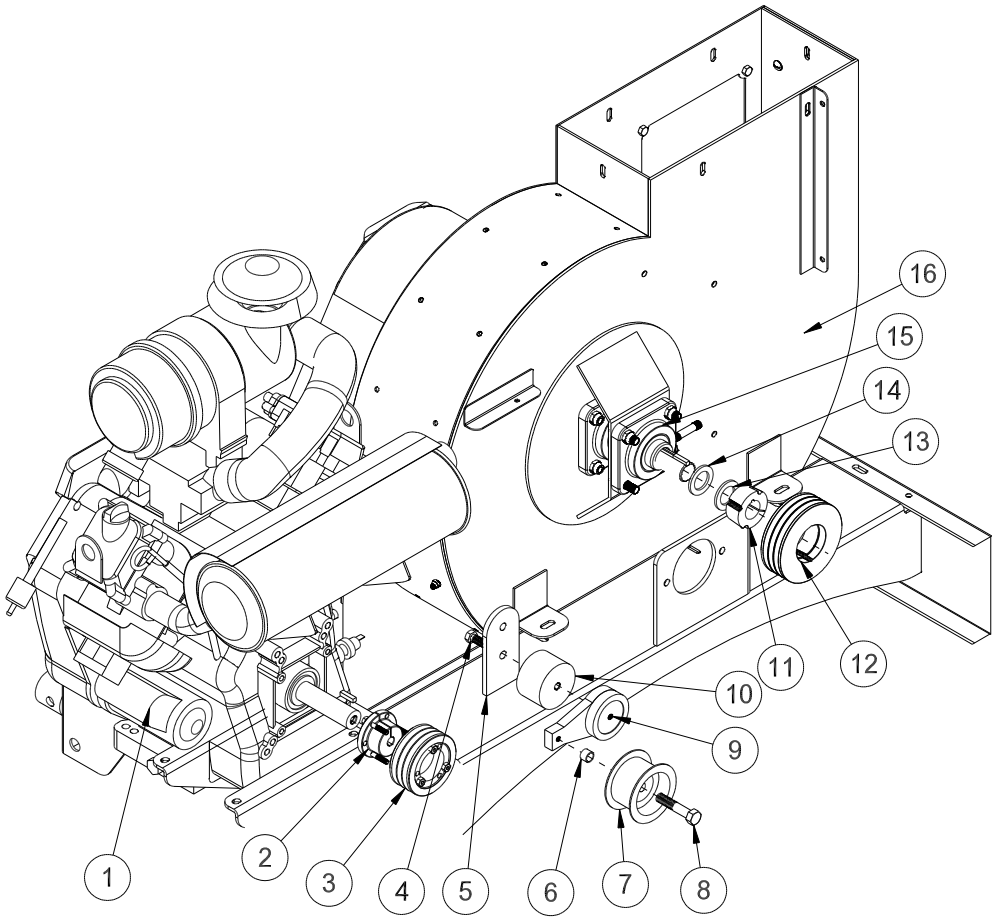

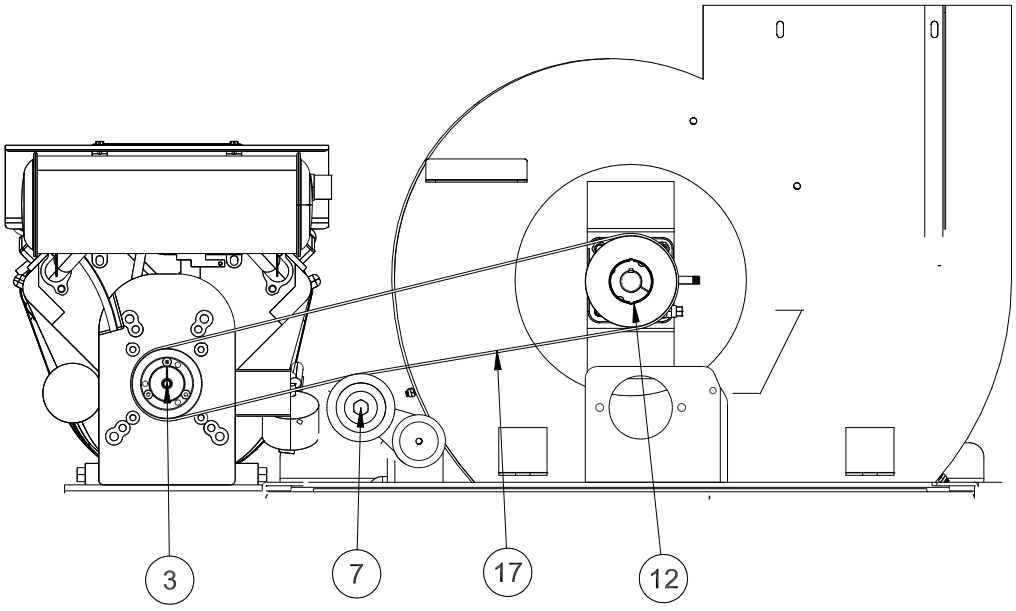

TENSIONER PULLEY PARTS LIST

REF#	PART#	DESCRIPTION	QUANTITY
1	78-493	Briggs & Stratton 23HP Engine	1
2	78-429	Hub, 1"	1
3	78-424	Pulley	1
4	HB-38-16-300	Hex Bolt, 3/8 -16 x 3	1
	HWL-38	Lock Washer, 3/8	1
5	78-449	Main Frame	1
6	16-990	Spacer	1
7	16-013	Idler Pulley	1
	42-338	Oilite Bushing	1
8	HB-38-16-200	Hex Bolt, 3/8 - 16 x 2	1
	HW-38	Flat Washer, 3/8	2
	HWL-38-16	Lock Washer, 3/8	1
9	42-327	Belt Tensioner	1
10	42-361	Tensioner Spacer	1
11	78-235	Hub, 1 1/8"	1
12	HMB-118-14	Machine Bushing 1 1/8 x 14GA	1
13	78-233	Pulley	1
14	HMB-118-10	Machine Bushing 1 1/8 x 10GA	2
15	78-223	Mounted Bearing (1 1/8" Bore)	2
16	78-375	Blower Housing	1
17	78-494	Belt	1

BLOWER HOUSING DRAWING

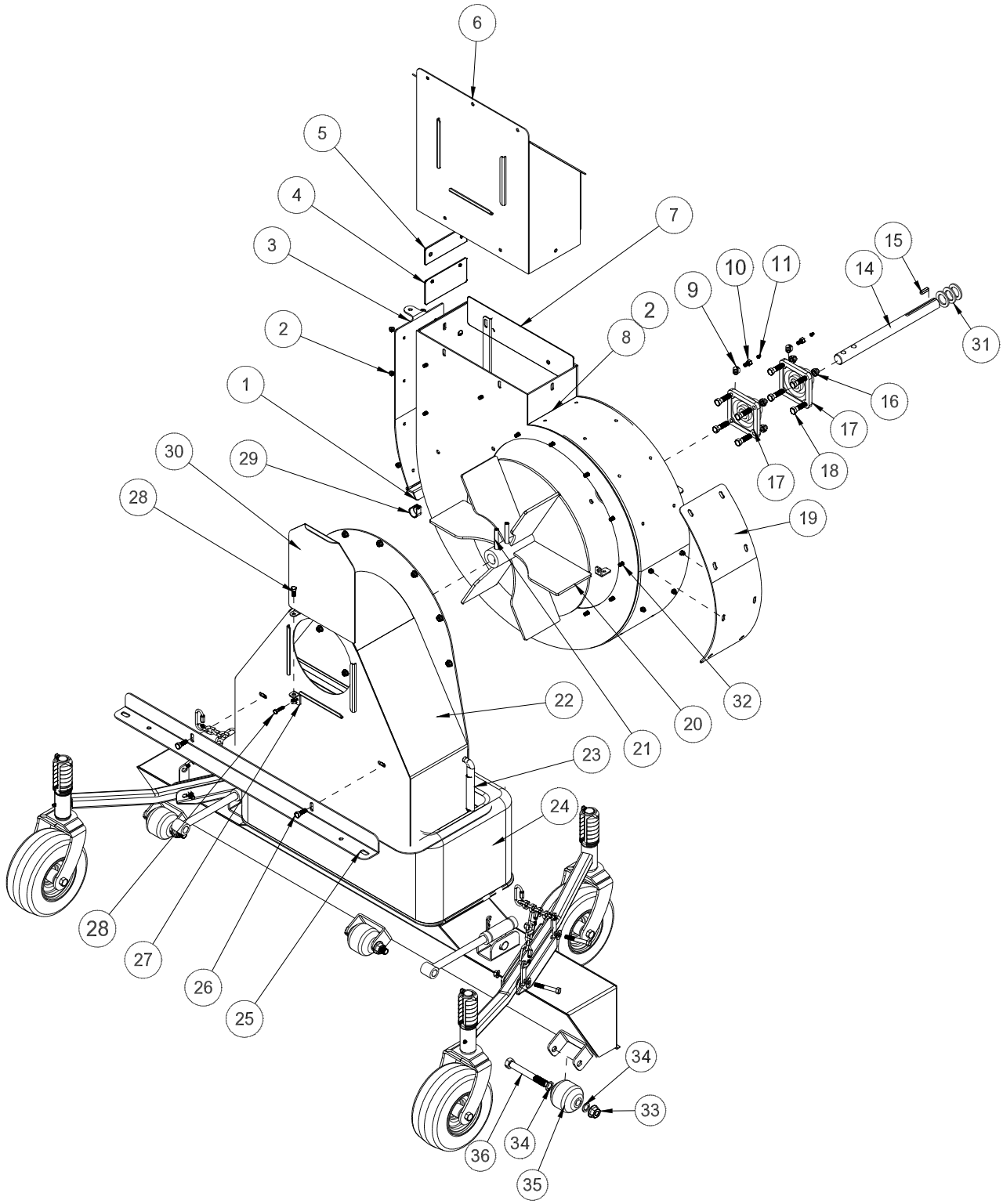

BLOWER HOUSING PARTS LIST

REF#	PART#	DESCRIPTION	QUANTITY
1	78-440	Door Pivot	1
2	HSTP-14-20-075	Phillips Truss Head Machine Screw, 1/4 - 20 x 3/4	18
	HSTP-14-20-100	Phillips Truss Head Machine Screw, 1/4 - 20 x 1	4
	HNTL-14-20	Nylon Lock Nut, 1/4 - 20	22
	HWF-14-150	Fender Washer, 1/4 x 1 1/2	22
3	78-439	Trap Door	1
	78-403	Trap Door Lining	1
4	78-411	Top Lining Holder	1
5	78-419	Bottom Lining Holder	1
6	78-262	Chute	1
7	78-355	Splice	1
8	78-375	Vacuum Housing	1
	78-436	Pipe Plug	1
	78-402	Blower Lining	1
9	18-479	Street Elbow	2
10	18-338	Male Connector	2
11	HG-18-45	Grease Fitting, 1/8 x 45°	2
14	78-336	Vacuum Housing Shaft	1
15	HKSQ-14-100	Machine Key, 1/4 x 1/4 x 1	1
16	HNTL-716-14	Nylon Lock Nut, 7/16 - 14	8
17	78-223	Mounted Bearing (1 1/8" Bore)	2
18	HB-716-14-150	Hex Bolt, 7/16 - 14 x 1 1/2	8
19	78-412	Wear Cover	1
	HSTP-14-20-100	Phillips Truss Head Machine Screw, 1/4 - 20 x 1	8
	HW-14	Flat Washer, 1/	8
	HWF-14-150	Fender Washer, 1/4 x 1 1/2	8
	HNTL-14-20	Nylon Lock Nut, 1/4 - 20	8
20	78-301	Balanced Fan	1
21	78-347	Spiral Spring Pin	2
22	78-257	Vacuum Housing	1
	8803-80	Trim Black	1
23	25-120	Handle Grip	1
	72-132	Spring	1
	HMB-12-14	Machine Bushing, 1/2 x 14GA	2
	HP-18-100	Cotter Pin, 1/8 x 1	1
24	78-243	Sweeper Boot	1
25	78-276	Vacuum Housing Support	1
26	HBFL-38-16-075	Flange Whiz-loc Bolt, 3/8 - 16 x 3/4	2
	HNFL-38-16	Flange Whiz-loc Nut, 3/8 - 16	2
27	78-433	Cover Plate Hex Bolt Tab	1
28	HB-14-20-075	Hex Bolt, 1/4 - 20 x 3/4	2
	HNTL-14-20	Nylon Lock Nut, 1/4 - 20	2
29	HLC-100	Loom Clamp	1
30	78-293	Cover Plate	1
31	HMB-118-10	Machine Bushing, 1 1/8 x 10GA	2
	HMB-118-14	Machine Bushing, 1 1/8 x 14GA	1
32	HBFL-516-18-075	Flange Whiz-loc Bolt, 5/16 -18 - 3/4	11
	HNTL-516-18	Nylon Lock Nut, 5/16 - 18	11
	HW-516	Flat Washer, 5/16 - 18	11
33	HNTL-58-11	Nylon Lock Nut, 5/8 - 11	3
34	HMB-58-14	Machine Bushing 5/8 x 14GA	6
35	78-486	Anti Scalp Roller	3
36	HB-58-11-500	Hex Bolt, 5/8 - 11 x 5	3

GAS TANK DRAWING

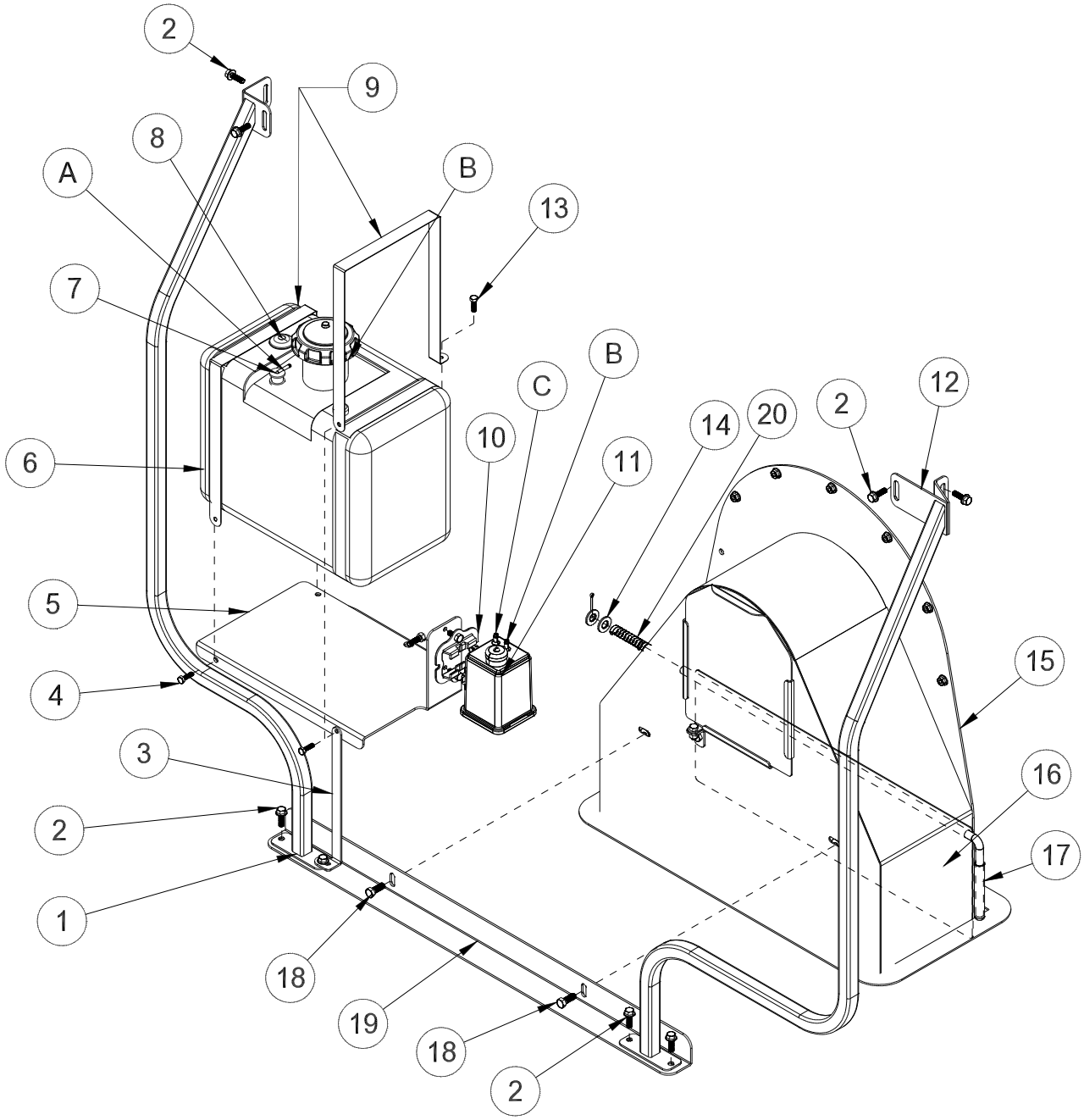

GAS TANK PARTS LIST

REF#	PART#	DESCRIPTION	QUANTITY
1	78-269	Right Brush Guard	1
2	HBFL-516-18-075	Flange Whiz-loc Bolt, 5/16 - 18 x 3/4	8
	HNFL-516-18	Nylon Lock Nut, 5/16 -18	8
3	78-458	Tank Brace	1
4	HB-14-20-075	Hex Bolt, 1/4 - 20 - 3/4	2
	HNTL-14-20	Nylon Lock Nut, 1/4 - 20	2
5	78-455	Tank Bracket	1
	HB-516-18-100	Hex Bolt, 5/16 - 18 x 1	2
	HNTL-516-18	Nylon Lock Nut, 5/16 - 18	2
6	15-838	6 Gal CARB Gas Tank (includes * items)	1
	42-814-02	Replacement Cap	1
	HNTL-14-20	Nylon Lock Nut, 1/4 - 20	4
7*		Top Draw	1
8*	15-838-01	Dial Fuel Level Gauge	1
9	78-456	Tank Strap	2
10	8-688	Canister Mount	1
	HB-14-20-075	Hex Bolt, 1/4 - 20 x 3/4	2
	HNFL-14-20	Nylon Lock Nut, 1/4 - 20	2
11	8-689	Carbon Canister	1
12	78-444	Left Brush Guard	1
13	HB-14-20-125	Hex Bolt, 1/4 - 20 x 1 1/4	2
	HNTL-14-20	Nylon Lock Nut, 1/4 - 20	2
14	HMB-12-14	Machine Bushing, 1/2 x 14GA	2
	HP-18-100	Cotter Pin, 1/8 x 1	1
15	78-257	Vacuum Housing	1
16		Vent	1
17	25-120	Handle Grip	1
18	HBFL-38-16-075	Flange Whiz-loc Bolt, 3/8 - 16 x 3/4	2
	HNFL-38-16	Flange Lock, 3/8 - 16	2
19	78-276	Vacuum Housing Support	1
20	72-132	Spring	1
A	8800-94	1/4" Fuel Hose x 94" (Top draw to Engine)	1
	18-186	Hose Clamp	2
B	8800-17	1/4" Fuel hose x 17" (Vent on tank to carb canister)	1
	18-186	Hose Clamp	2
C	9025-90	3/16" Fuel Hose x 90" (Carb Canister to Fuel filter)	1
	18-186	Hose Clamp	1

VACUUM HEAD DRAWING

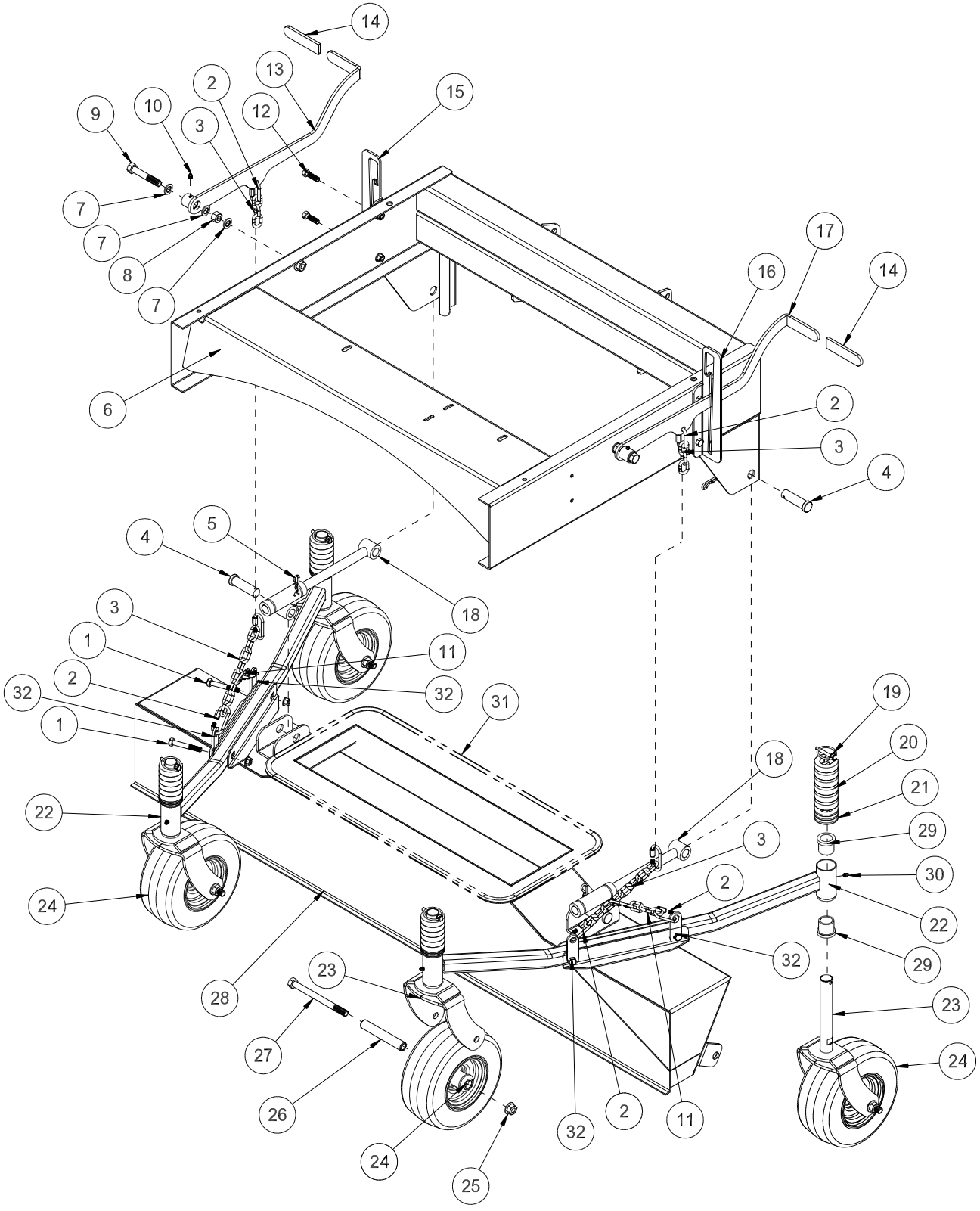

VACUUM HEAD PARTS LIST

REF#	PART#	DESCRIPTION	QUANTITY
1	HB-38-16-250	Hex Bolt, 3/8 - 16 x 2½	4
	HW-38	Flat Washer, 3/8	4
	HNTL-38-16	Nylon Lock Nut, 3/8 - 16	4
2	78-241	Chain Connector	8
3	8820-8	Machine Chain Straight Link	2
4	HCP-34-250	Clevis Pin, 3/4 x 2 1/2	4
5	HHP-18	Bridge Pin, 1/8	4
6	78-449	Main Frame	1
7	HMB-58-14	Machine Bushing, 5/8 x 14GA	6
8	HN-58-11	Hex Nut, 5/8 - 11	2
9	HB-58-11-300	Hex Bolt, 5/8 - 11 x 3	2
	HNTL-58-11	Nylon Lock Nut, 5/8 - 11	2
10	HG-14-28-180	Grease Fitting, 1/4 - 28 x 180°	2
11	8820-3	Machine Chain Straight Link	2
12	HB-38-16-125	Hex Bolt, 3/8 - 16 x 1 1/4	4
	HNFL-38-16	Flange Whiz-loc Nut, 3/8 - 16	4
13	78-284	Left Hand Deck Lift	1
	20-018	Bushing (part of 78-284)	1
14	15-020	Hand Grip	2
15	78-286	Left Hand Lift Arm Latch	1
	HB-516-18-100	Hex Bolt, 5/16 -18 x 1	2
	HNFL-516-18	Nylon Lock Nut, 5/16 - 18	2
16	78-285	Right Hand Lift arm Latch	1
	HB-516-18-100	Hex Bolt, 5/16 -18 x 1	2
	HNFL-516-18	Nylon Lock Nut, 5/16 - 18	2
17	78-283	Right Hand Deck Lift	1
	20-018	Bushing (part of 78-283)	1
18	78-271	Reel Lift Rod	2
19	42-539	Lynch Pin, 5/16	4
20	72-053	Quick Spacer, 1/2"	24
21	72-136	Quick Spacer, 10GA	12
22	78-393	Castor Arm (includes * items)	2
23	78-434	Castor Fork	4
24	42-202	Tire and Wheel	4
	42-202-01	Tire, 9 x 3.5 x 4 Ply	4
	42-202-02	Wheel	4
25	HNTL-12-13	Nylon Lock Nut, 1/2 - 13	4
26	33-338	Axle Bearing	4
27	HB-12-13-600	Hex Bolt, 1/2 - 13 x 6	4
28	78-491	Vacuum Head	1
29*	18-223	Flange Bushing	4 per
30*	HG-14-28-180	Grease Fitting, 1/8 x 28 x 180°	2 per
31	8803-80	Black Trim, 80"	1
32	78-421	Chain Bracket	4

HOPPER DRAWING

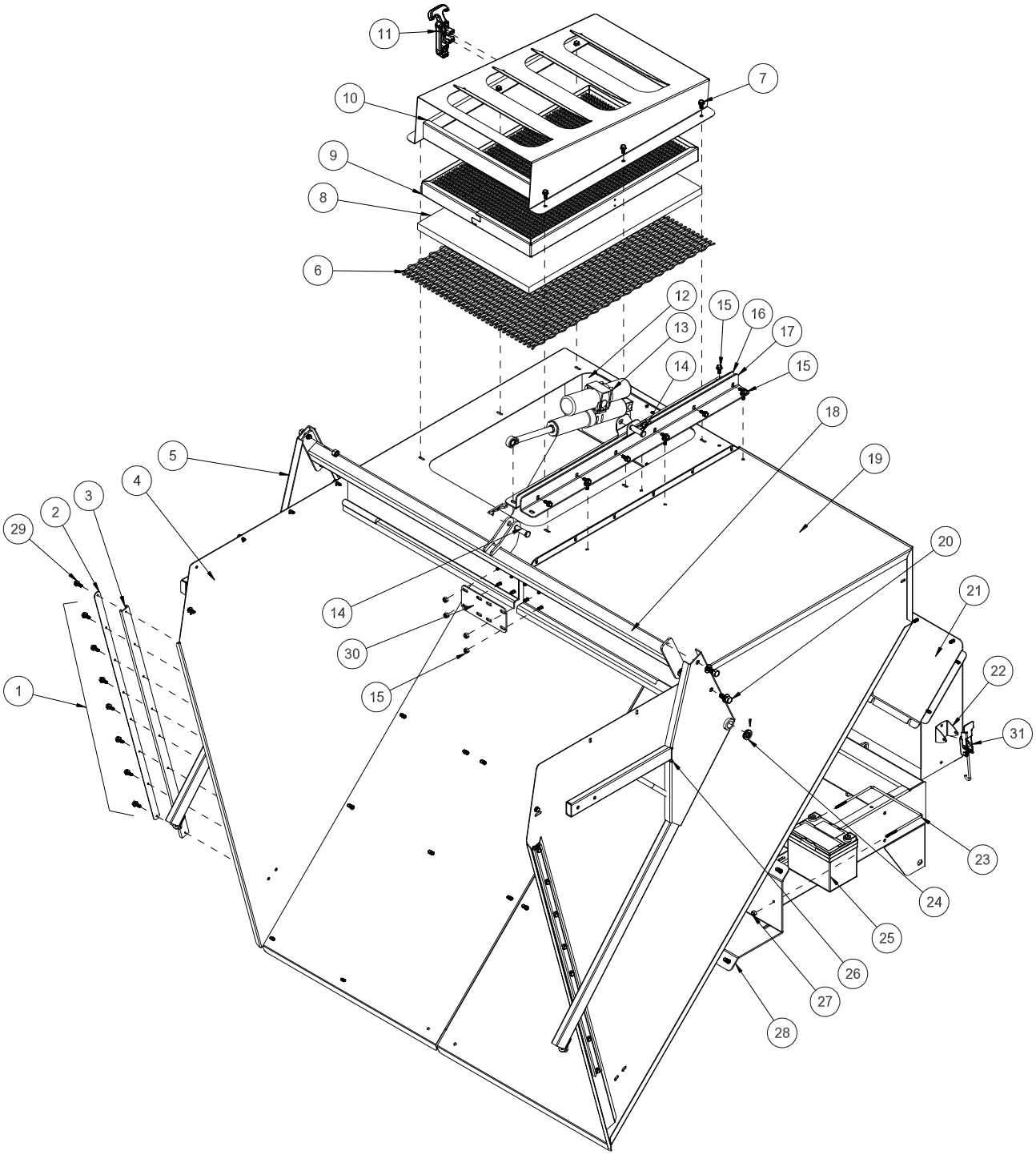

REF#	PART#	DESCRIPTION	QUANTITY
1	HSD-8-075	Pan Head Drill Screw, #8 x 3/4	14
2	8946-42	Wear Strip, 42"	2
3	78-385	Wear Strip Bracket	2
4	78-383	Left Hopper	1
5	78-264	Left Door Arm	1
6	78-382	Screen	1
7	HB-14-20-125	Hex Bolt, 1/4 - 20 x 1 1/4	6
	HNFL-14-20	Flange Whiz-loc Nut, 1/4 - 20	6
8	78-386	Hopper Filter	1
9	78-394	Filter Case	1
10	78-395	Filter Hood	1
11	78-384	Flex Draw Latch	1
	HRS-316-100	Rivet	3
	HRW-316	Rivet Washer	3
12	78-345	Clear Lexan Window	1
	HSTP-14-20-075	Phillips Truss Head Machine Screw, 1/4 - 20 x 3/4	12
	HNFL-14-20	Flange Whiz-loc Nut, 1/4 - 20	12
13	30-214	KYB Elec/Hyd Actuator	1
14	HCP-58-200	Clevis Pin, 5/8 x 2	4
	HHP-.177	Bridge Pin, .177 x 3 3/4	4
15	HBFL-516-18-075	Flange Whiz-loc Bolt, 5/16 - 18 x 3/4	62
	HNFL-516-18	Flange Whiz-loc Nut, 5/16 - 18	62
16	78-496	Left Cylinder Arm	1
17	78-497	Right Cylinder Arm	1
18	78-495	Cross Bar	1
19	78-260	Right Hopper	1
20	HB-12-13-150	Hex Bolt, 1/2 - 13 x 1 1/2	8
	HW-12	Flat Washer, 1/2	8
	HNTL-12-13	Nylon Lock Nut, 1/2 - 13	8
21	78-262	Chute	1
	HBFL-516-18-075	Flange Whiz Hex Bolt, 5/16 - 18 - 3/4	6
	HNFL-516-18	Flange Whiz-loc Nut, 5/16 - 18	6
22	78-432	Latch Keeper	1
23	78-304	Battery Hold Down	1
	HWL-14	Lock Washer, 1/4	2
24	HMB-34-10	Machine Bushing, 3/4 x 10GA	4
	HP-18-100	Cotter Pin, 1/8 x 1	2
25	22-073	Battery (optional)	1
26	78-263	Right Door Arm	1
27	HN-14-20	Hex Nut, 1/4 - 20	2
28	78-273	Hopper Mount	1
29	HSM-10-32-100	Machine Screw, #10 -32 x 1	2
	HWL-10	Lock Washer, #10	2
	HN-10-32	Hex Nut, #10 - 32	2
30	78-291	Connecting Plate	1
31	48-115	Adjustable Draw Latch	1
	HB-516-18-250	Hex Bolt, 5/16 - 18 x 2 1/2	1
	HNTL-516-18	Nylon Lock Nut, 5/16 - 18	1

TAILGATE DRAWING

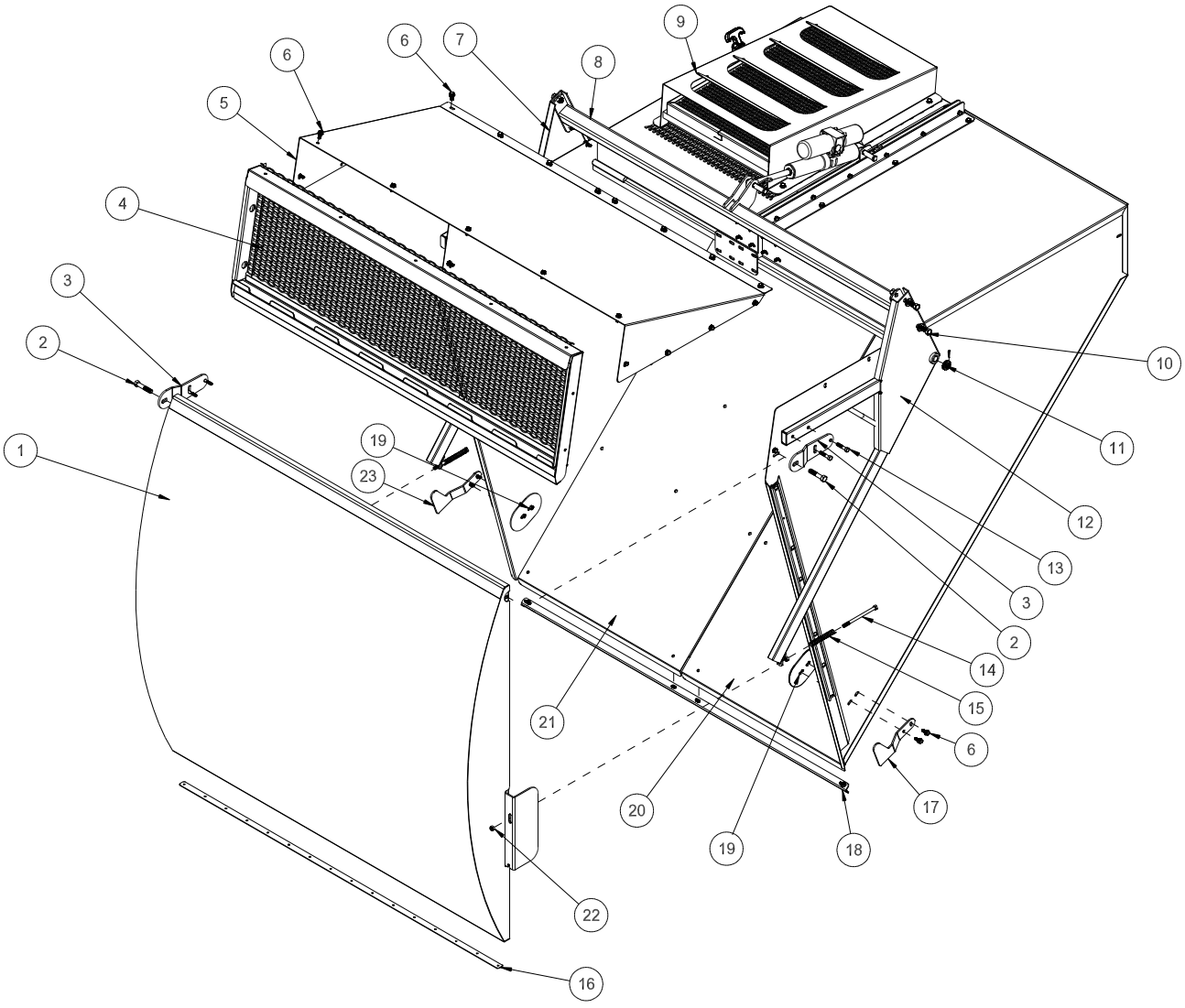

REF#	PART#	DESCRIPTION	QUANTITY
1	78-266	Hopper Door	1
2	HNFL-12-13	Flange Whiz-loc Nut, 1/2 - 13	4
	HW-12	Flat Washer, 1/2	4
	HB-12-13-250	Hex Bolt, 1/2 - 13 x 2 1/2	2
3	78-319	Tailgate Adjustment	2
4	78-305	Filter Insert	1
5	78-272	Hopper Cover	1
6	HBFL-516-18-075	Flange Whiz-loc Bolt, 5/16 - 18 x 3/4	18
	HNFL-516-18	Flange Whiz-loc Nut, 5/16 - 18	18
7	78-264	Left Door Arm	1
	HG-14-28-180	Grease Fitting, 1/4 - 28 x 180	1
8	78-495	Cross Bar	1
9	78-395	Filter Hood	1
	HB-14-20-125	Hex Bolt, 1/4 - 20 x 1 1/4	6
	HNFL-14-20	Flange Whiz-loc Nut, 1/4 - 20	6
10	HB-12-13-150	Hex Bolt 1/2 - 13 x 1 1/2	8
	HW-12	Flat Washer, 1/2	8
	HNTL-12-13	Nylon Lock Nut, 1/2 - 13	8
11	HMB-34-10	Machine Bushing, 3/4 x 10GA	4
	HP-18-100	Cotter Pin, 1/8 x 1	2
12	78-263	Right Door Arm	1
	HG-14-28-180	Grease Fitting, 1/4 - 28 x 180	1
13	HB-38-16-175	Hex Bolt, 3/8 - 16 x 1 3/4	4
	HNFL-38-16	Flange Whiz-loc Nut, 3/8 -16	4
14	HB-38-16-575	Hex Bolt, 3/8 - 16 x 5 3/4	2
15	19-205	Spring	2
16	78-387	Weather Stripping Bracket	1
	8979-61	Weather Stripping	1
17	78-389	Right Hopper Door Latch	1
18	78-282	Hopper Strap	1
19	78-292	Door Latch Support	2
20	78-260	Right Hopper	1
21	78-383	Left Hopper	1
22	HNFL-38-16	Flange Whiz-loc Nut, 3/8 - 16	4
23	78-388	Left Hopper Door Latch	1

REAR AXLE PARTS LIST

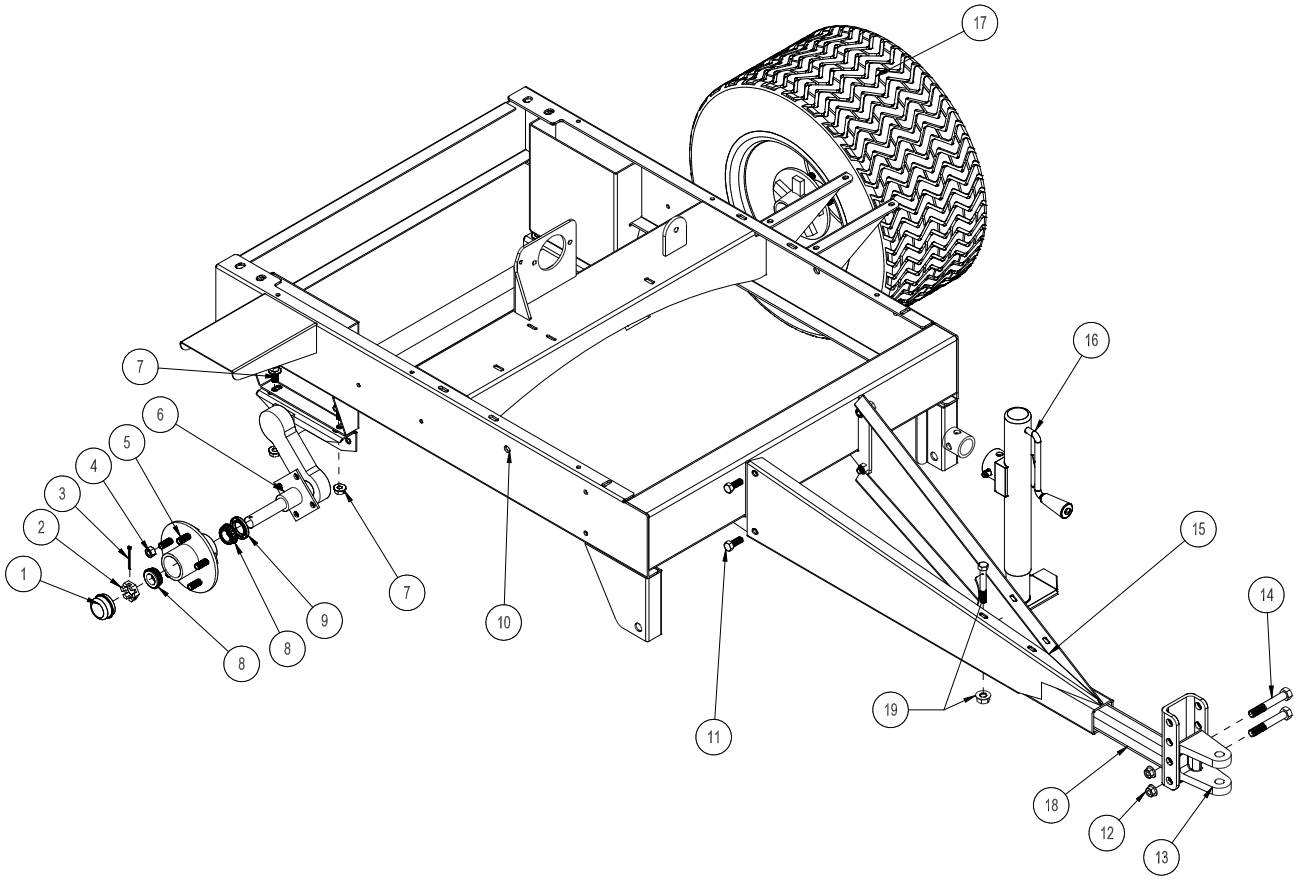

REAR AXLE PARTS LIST

REF#	PART#	DESCRIPTION	QUANTITY
1*	80-167	Grease Cap	2
2*	HNAR-100-14	Slotted Jam Nut ,1 - 14	2
3*	HP-18-200	Cotter Pin, 1/8 x 2	2
4*	HNL-12-20	Lug Nut, 1/2 - 20	10
5*	78-216-01	Hub Assembly (includes all * items)	2
6	78-216	Axle Complete 2000#	1
7	HB-12-13-150	Hex Bolt, 1/2 -13 x 1 1/2	4
	HW-12	Flat Washer, 1/2	4
	HNTL-12-13	Nylon Lock Nut, 1/2 -13	4
8*	78-119	Bearing Cup and Cone	2
9*	78-216-02	Grease Seal	2
10	78-449	Main Frame	1
11	HB-12-13-125	Hex Bolt, 1/2 - 13 x 1 1/4	4
	HNTL-12-13	Nylon Lock Nut, 1/2 - 13	4
12	HNCL-58-11	Center Nylon Lock Nut, 5/8 - 11	2
13	78-244	3/4" Clevis	1
14	HB-58-11-400	Hex Bolt, 5/8 - 11 x 4	2
15	78-267	Tongue	1
16	78-240	Jack	1
17	78-221	Tire and Wheel	2
	78-221-01	Tire, 24 - 13.00 x 12 6 ply	2
	78-221-02	Wheel	2
18	78-268	Hitch Insert	1
19	HB-12-13-350	Hex Bolt, 1/2 - 13 x 3 1/2	1
	HNTL-12-13	Nylon Lock Nut, 1/2 - 13	1

⚠ IMPORTANT **This unit is not intended for highway use.**

78-208 FILTER SYSTEM DRAWING

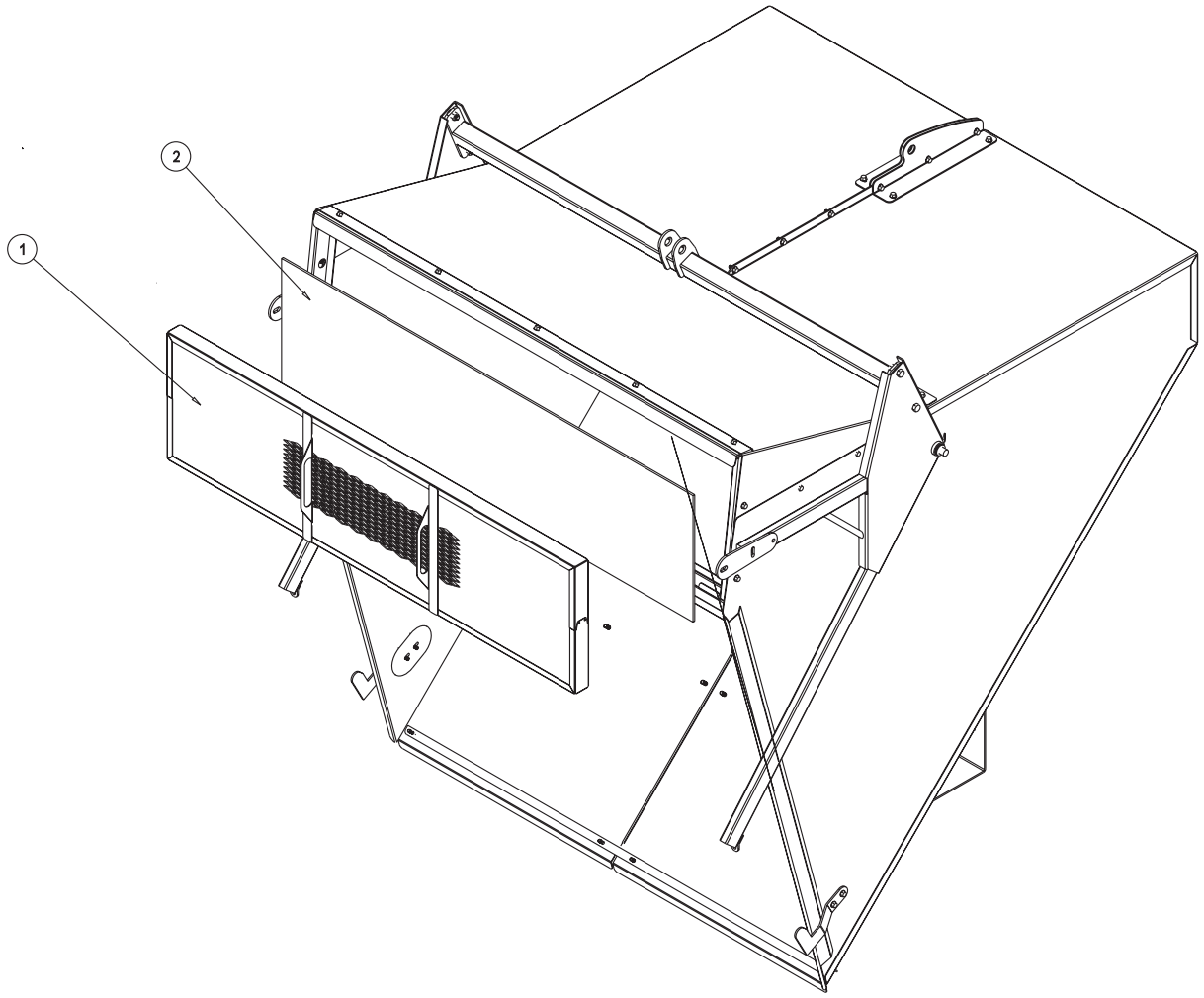

78-208 FILTER SYSTEM PARTS LIST

REF#	PART#	DESCRIPTION	QUANTITY
1	78-288	Filter Case	1
2	78-328	Filter	1

REF#	PART#	DESCRIPTION	QUANTITY
A	25-286	Decal, Pinch Point	2
B	25-363	Decal, Maximum Depth	2
C	78-535	Decal V62-V Turf Vac	2
D	25-372	Decal, Smithco Star	1
E	25-359	Decal, Smithco	1
F	25-298	Decal, Warning Hot	1
F	16-088	Decal, Moving Parts	1
G	25-305	Decal, Rotating Parts	2
H		Serial Tag	1
I	25-355	Decal, Tire Pressure 18PSI	6
J	25-307	Decal, Gasoline/Refuel	1
K	25-362	Decal, Danger Fire	1
L	25-277	Decal, Battery Warning	1
M	78-407	Decal, Maximum Load Capacity	1
N	78-552	Decal. Open/Close	1

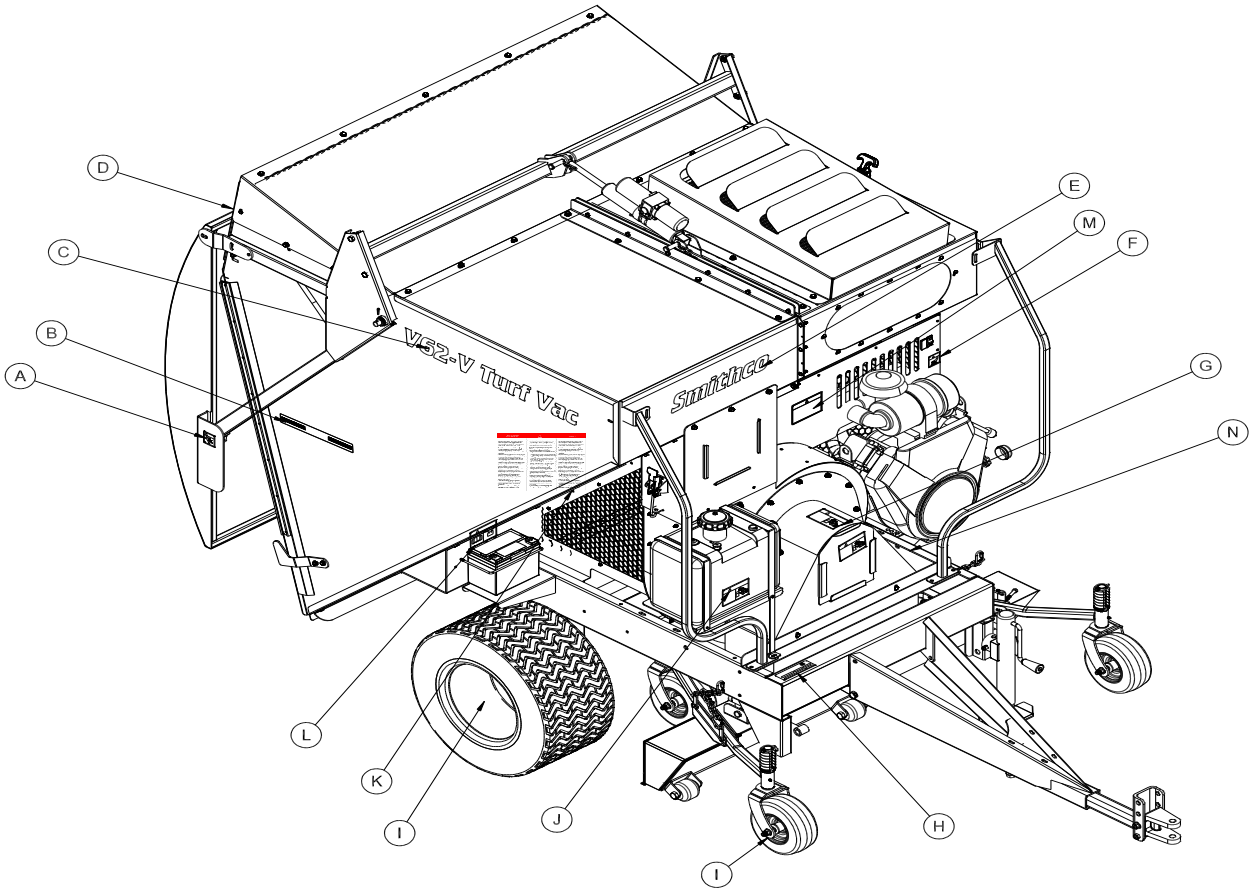

REPLACEMENT FILTERS

50-403	In-Line Fuel Filter	
76-487	Engine Oil Filter	Briggs & Stratton # 842921

REPLACEMENT BELTS

78-494	3-V Belt

FLUIDS

Engine Oil	SAE 10W-40 API Service SJ or higher Motor Oil

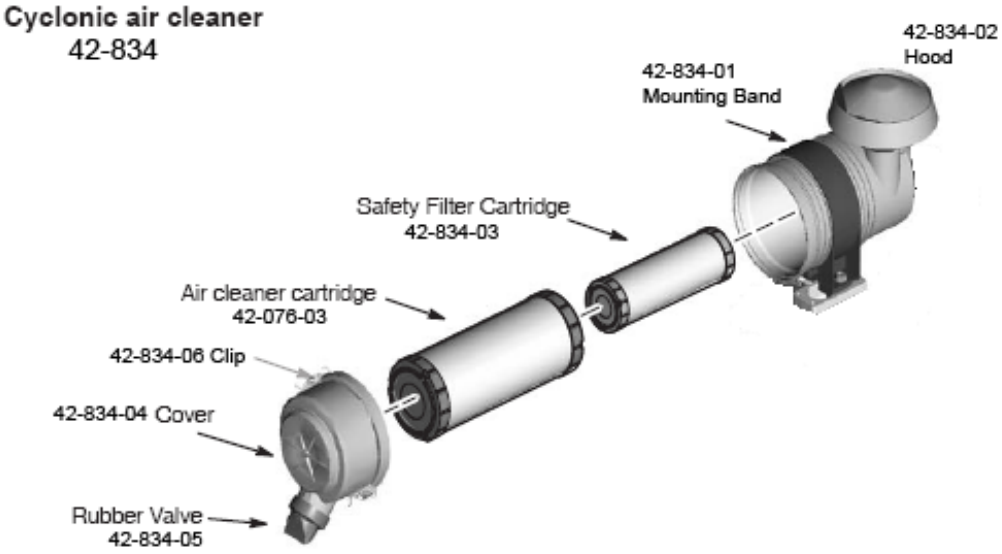

The Smithco Commercial Products Two-Year Limited Warranty

Smithco, Inc. (Smithco) warrants your 2016 or newer Smithco Commercial Product ("Product") purchased after October 1, 2016 to be free from defects in materials or workmanship for the period of time listed below. Where a warrantable condition exists, Smithco will repair the Product at no cost to you including diagnosis, labor (at the Smithco standard labor rate, subject to the Smithco flat rate schedule), and parts.

Warranty Duration is:

(1) Two years, 1500 operational hours* from the date of delivery to the original purchaser or Five years from the date of original manufacturer of the product, whichever occurs first. (*Products equipped with hour meter).

(2) Products used in rental situations are covered for 90 days from date of delivery to original user/renter.

Owner Responsibilities:

As the Product owner, you are responsible for required maintenance and adjustments stated in your Owner's Manual. Failure to perform required maintenance and adjustments can be grounds for disallowing a warranty claim. **You are particularly responsible to train all present and future operators of this product on the safe operation of this product at your location.**

Instructions for Obtaining Warranty Service:

You are responsible for notifying the Authorized Smithco Products Distributor from whom you purchased the Product as soon as you believe a warrantable condition exists and not later than 30 days from discovery of the condition.

If you need help locating an Authorized Smithco Distributor, or if you have questions regarding your warranty rights or responsibilities, you may contact us at:

Smithco Product Support Department
200 West Poplar Ave.
Cameron, Wisconsin 54822
Telephone: 800-891-9435 E-Mail: ProductSupport@Smithco.com

Maintenance Parts:

Parts scheduled for replacement as required maintenance ("Maintenance Parts"), are warranted for the period of time up to the scheduled replacement time for that part.

Items/Conditions Not Covered:

Not all product failures or malfunctions that occur during the warranty period are defects in materials or workmanship. The items/conditions listed below are not covered by this warranty:

- Product failures which result from the use of non-Smithco replacement parts, or from installation and use of add-on, modified, or unapproved accessories are not covered.
- Product failures which result from failure to perform required maintenance and/or adjustments are not covered.
- Product failures that result from operating the Product in an abusive, negligent or reckless manner are noT covered.
- This warranty does not apply to parts subject to consumption through use, unless found to be defective. Examples of parts which are consumed, or used up, during normal Product operation include, but are not limited to: blades, tines, teeth, scarifiers, rakes, plates, wear plates, castor wheels, tires, batteries, filters, belts, nozzles, etc.

- This warranty does not apply to failures caused by outside influence. Items considered to be outside influence include, but are not limited to, weather, storage practices, contamination, use of unapproved coolants, lubricants, additives, or chemicals, etc.

- This warranty does not apply to normal “wear and tear” items. Normal “Wear and Tear” includes, but is not limited to, damage to seats due to wear or abrasion, worn painted surfaces, scratched decals or windows, etc.

- Smithco may require the return of failed parts or components in order to determine the validity of any warranty claim.

- Smithco will not be obligated to replace components of other manufacturers if inspection by the original component manufacturer indicates that failure was due to normal wear and tear, expected consumption through use or improper care or service.

Other Legal Disclaimers:

The above remedy for product defects through repair or replacement by an authorized Smithco distributor or dealer is the purchaser’s sole remedy for any defect. This warranty gives you specific legal rights, and you may also have other rights which vary from state to state.

THERE ARE NO OTHER EXPRESS WARRANTIES OTHER THAN THOSE SET FORTH ABOVE. ALL IMPLIED WARRANTIES OF MERCHANTABILITY AND FITNESS FOR USE ARE LIMITED TO THE DURATION OF THE LIMITED WARRANTIES CONTAINED HEREIN.

Some states may not allow limitations on how long an implied warranty lasts, so the above limitation may not apply to you.

THE SMITHCO COMPANY IS NOT LIABLE FOR INDIRECT, INCIDENTAL OR CONSEQUENTIAL DAMAGES IN CONNECTION WITH THE USE OF THE PRODUCT, INCLUDING ANY COST OR EXPENSE OF PROVIDING A SUBSTITUTE PRODUCT OR SERVICE DURING PERIODS OF MALFUNCTION OR NON-USE.

Some states may not allow the exclusion of indirect, incidental or consequential damages, so the above exclusion may not apply to you.

Smithco neither assumes, nor authorizes any person to assume for it, any other liability in connection with the sale or use of this product.

Smithco

Wayne, PA 19087 www.smithco.com